RV®

Precision Reduction Gear RV™

AGV Drive Unit

RVW®

RVW® Series

Nabtesco®

Contributing to society with our ‘Moving it. Stopping it.’ technologies

Nabtesco manufactures products which are used in everyday life. Our high-accuracy components are essential for moving objects; they may be rarely visible, but are the foundation of everyday objects that you see moving and wonder how. Nabtesco’s technologies are found throughout objects that move and stop people’s lives.

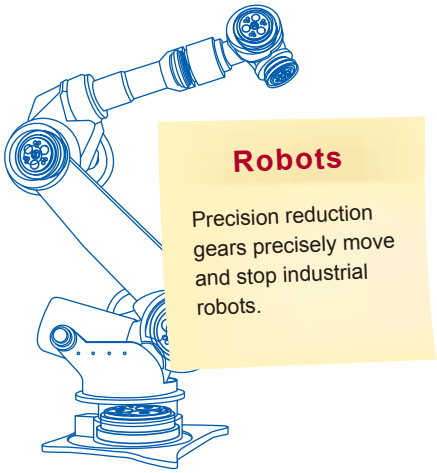

Robots

Precision reduction gears precisely move and stop industrial robots.

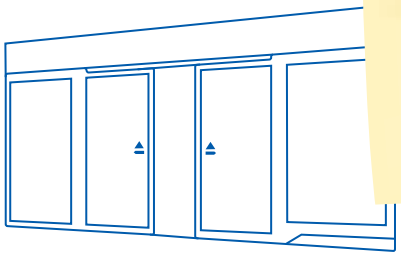

Doors

Nabtesco technology opens and closes automatic doors in buildings and platform doors at train stations.

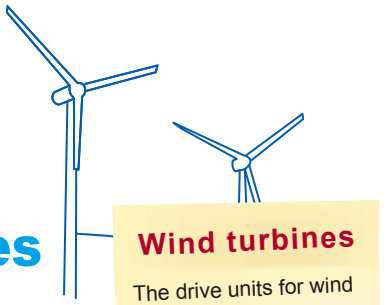

Wind turbines

The drive units for wind turbine generators control the orientation of the wind turbine and the angle of the blades.

Nabtesco technologies are at work in many areas of our daily lives.

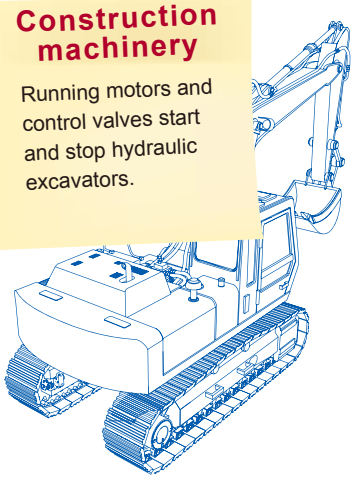

Construction machinery

Running motors and control valves start and stop hydraulic excavators.

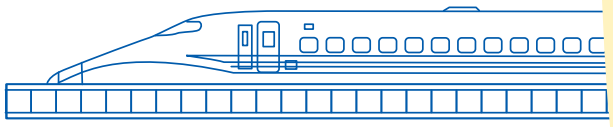

Bullet trains

Brakes and doors ensure safety and comfort for the world-famous Shinkansen bullet trains.

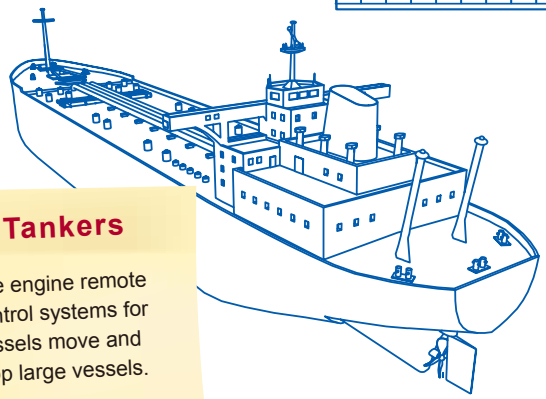

Tankers

The engine remote control systems for vessels move and stop large vessels.

Airplanes

The flight control systems are crucial for the flight safety of aircraft.

© 2020 Nabtesco Corporation. All rights reserved.

CONTENTS

Who is Nabtesco?

The key words for Nabtesco are 'motion control'. We use our strengths in the fields of component and systems technologies to develop highly creative products. Through the Nabtesco Group as a whole, we can also utilize our advantage of expertise to maximum effect in order to further enhance these strengths.
In the air, on land and at sea, we have a large share in various fields of both international and domestic markets. Nabtesco will continue to evolve by utilizing its strengths in many fields and by exploring the possibilities of the future.

April 2002 Initiation of hydraulic equipment business alliance
October 2003 Business merger

The business alliance between Teijin Seiki and NABCO on hydraulic equipment projects was the beginning of a mutual confirmation by the companies of the other's product configuration, core technologies, corporate strategies and corporate culture. This led to a common recognition that a business merger would be an extremely effective means of increasing corporate value and achieving long-term development. Based on this mutual judgment, in 2003 an equity transfer was conducted to establish Nabtesco as a pure holding company, with both firms as wholly owned subsidiaries. After a year of preparation, both companies were absorbed and amalgamated by means of a short form merger, and Nabtesco was transitioned to an operating holding company.

What is the RVW® series? 02
Applications 03
Advantages of RVW® series 04 – 05
Advantages of Mecanum wheel 06
Operating principle of Mecanum wheel 07

Specifications, External Dimensions

Description of model code 09
Rating table 10
External dimensions RVW-7PG main unit 11 – 12
External dimensions RVW-7PG motor flange 13 – 14
EExternal dimensions RVW-7PG input shaft 15
External dimensions RVW-10PG main unit 16 – 17
External dimensions RVW-10PG motor flange 18 – 19
External dimensions RVW-10PG input shaft 20
External dimensions RVW-15PG main unit 21 – 22
External dimensions RVW-15PG motor flange 23
External dimensions RVW-15PG input shaft 24
External dimensions RVW-20PG main unit 25 – 26
External dimensions RVW-20PG motor flange 27
External dimensions RVW-20PG input shaft 28
Selection table 29

Technical Information

Considering the use of RVW® series 31
Glossary 32

Product selection
Product model and motor selection flowchart 33
Product model and motor selection calculation formula 34 – 38

Technical data
No-load running torque 39

Design points
Engineering notes 40 – 42

Appendix
Proposal for an AGV/AMR remote-controlled wagon 43
Troubleshooting checksheet 44
Warranty Back inside cover

© 2020 Nabtesco Corporation. All rights reserved.

What is the RVW® series?

An in-wheel drive unit ideal for large AGVs, combining high load resistance with high reliability

This is achieved by utilizing the high-precision processing technology and assembly techniques of the Precision Reduction Gear RV™, which can be found in industrial robots worldwide.

Ideal solution- A Mecanum Wheel AGV Drive Unit

This product integrates a Mecanum wheel and Precision Gear RV™.

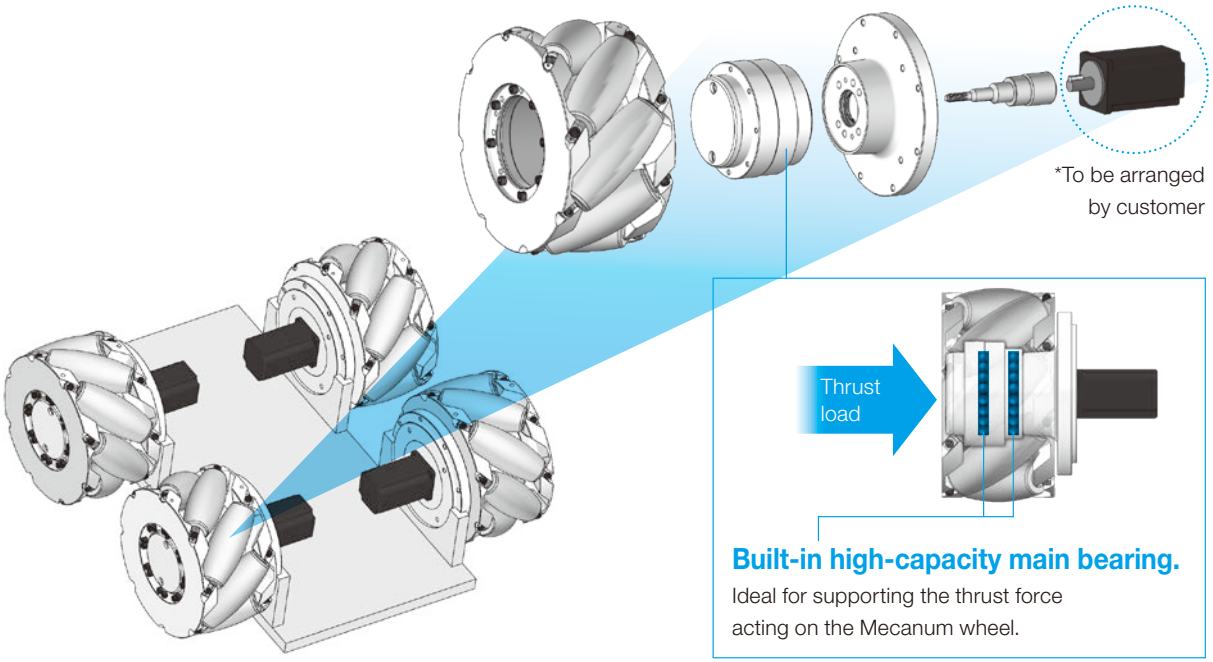

Built-in high-capacity main bearing.
Ideal for supporting the thrust force acting on the Mecanum wheel.

© 2020 Nabtesco Corporation. All rights reserved.

Applications

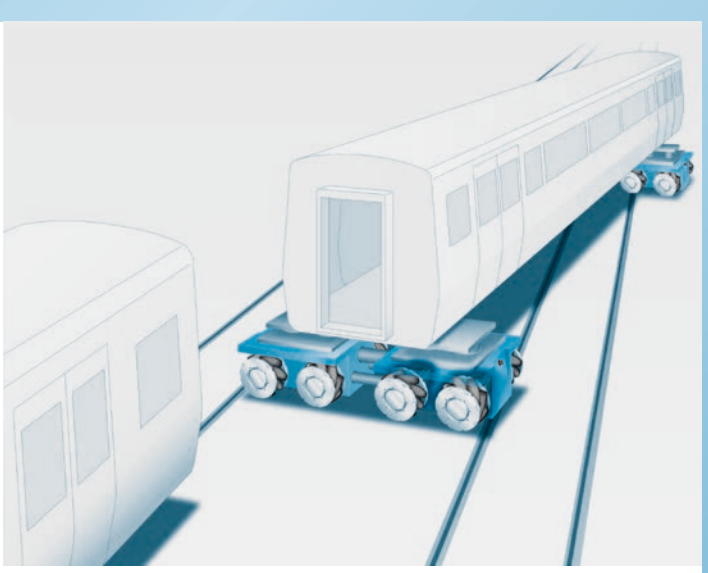

Assembly and maintenance of railroad vehicles

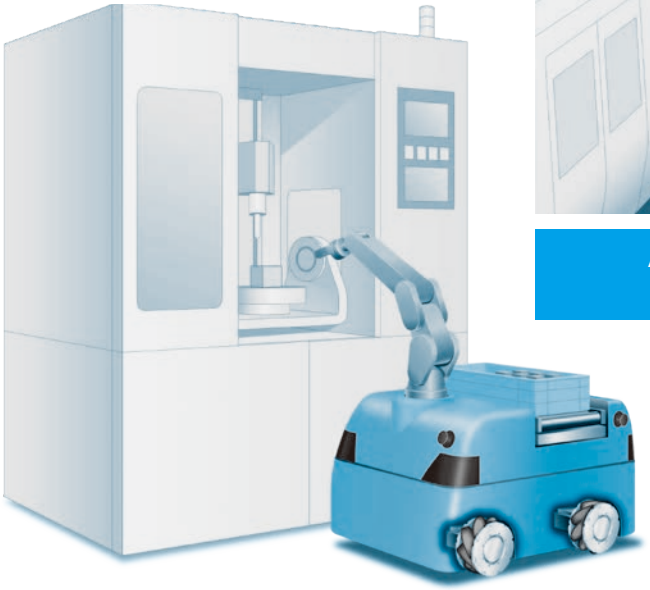

Autonomous mobile robot

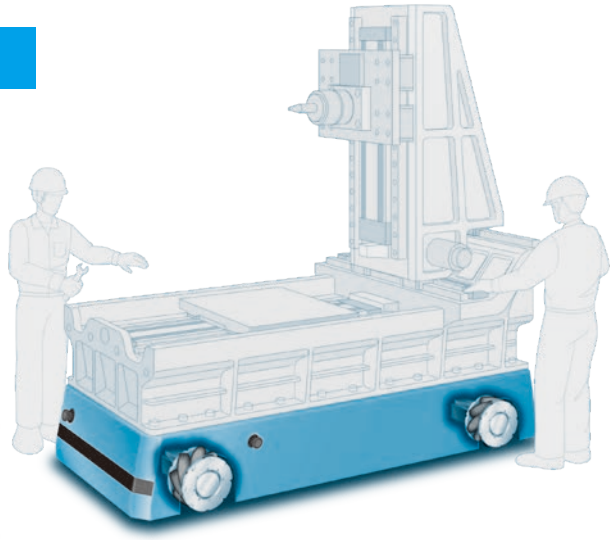

Transport of machines during assembly process

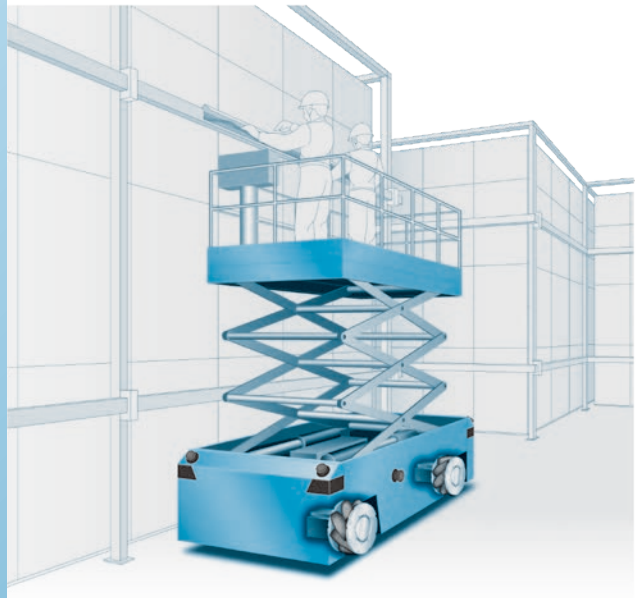

All-direction lifter or aerial work platform

© 2020 Nabtesco Corporation. All rights reserved.

Advantages of RVW® series

Solving your AGV problems: RVW® Series!

High Durability

A structure and materials optimized using CAE analysis and repeated testing ensure high durability

Under a load of 250 kgf at a speed of 60 m/min, the RVW-10PG achieves approx. 8,000 km of travel (reference).

Wheel durability test

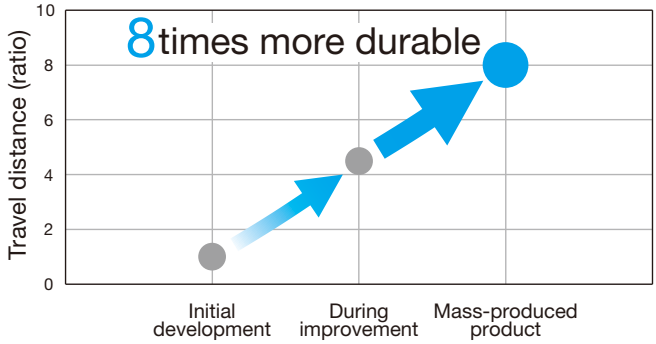

High Quality

We measure the rolling resistance coefficient* of every product and confirm that it is under the threshold before shipment.

* The rolling resistance coefficient (Crr) is calculated by subtracting the load from the rotation torque (T) of one wheel revolution.

$Crr = \frac{T}{r \times F}$ (r: wheel radius, F: load)

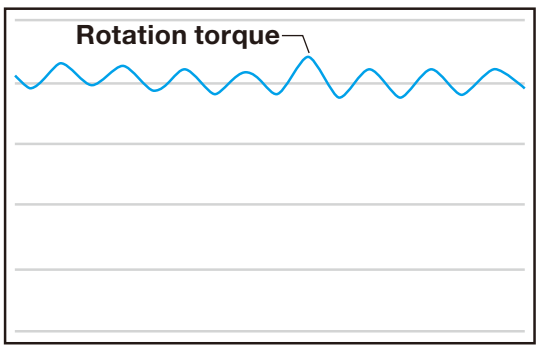

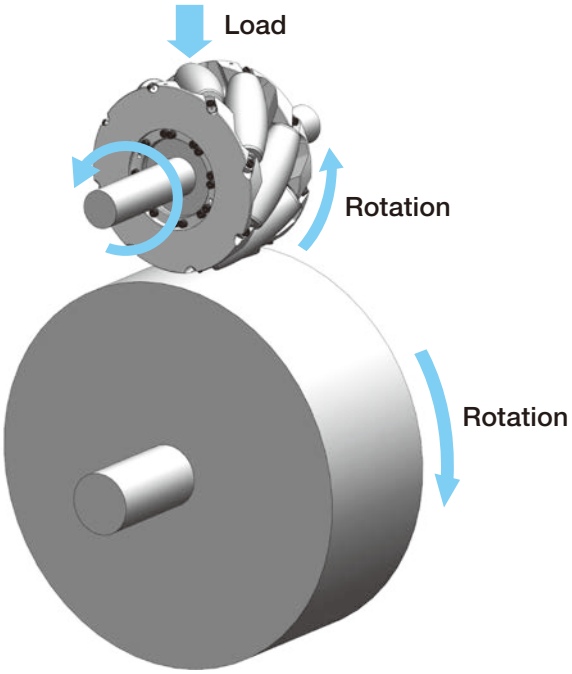

© 2020 Nabtesco Corporation. All rights reserved.

Solving your AGV problems: RVW® Series!

High Payload

With Mecanum wheels, heavy objects can be easily transported!

Mecanum wheel suitable for high loads

Example (RVW-20PG)
Loading capacity 2,500 kgf / Mecanum wheel

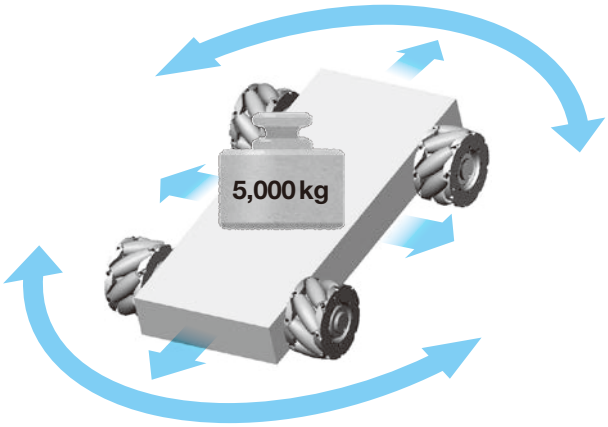

Easy Installation

Mecanum AGV assembly made simple!
A unit product that can easily be incorporated into the frame

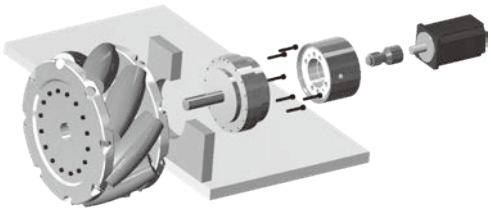

Example: Conventional product

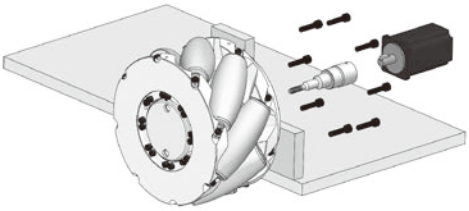

Example: Nabtesco drive unit

Compact

Making compact AGV design possible!
Uses an in-wheel structure.

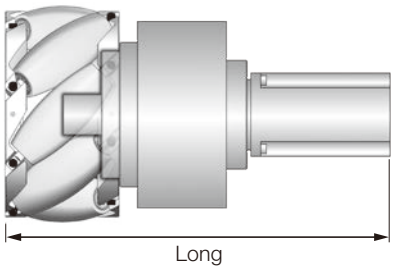

Example: Conventional product

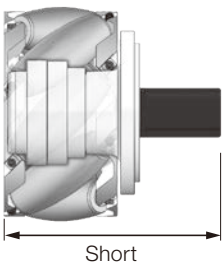

Example: Nabtesco drive unit

© 2020 Nabtesco Corporation. All rights reserved.

Advantages of Mecanum wheel

Traveling in all directions and accurate positioning

Mecanum AGV can travel smoothly in all directions and change direction freely. Moving into narrow spaces and accurate positioning are possible. It is suitable for applications that require transport within less space and accurate positioning.

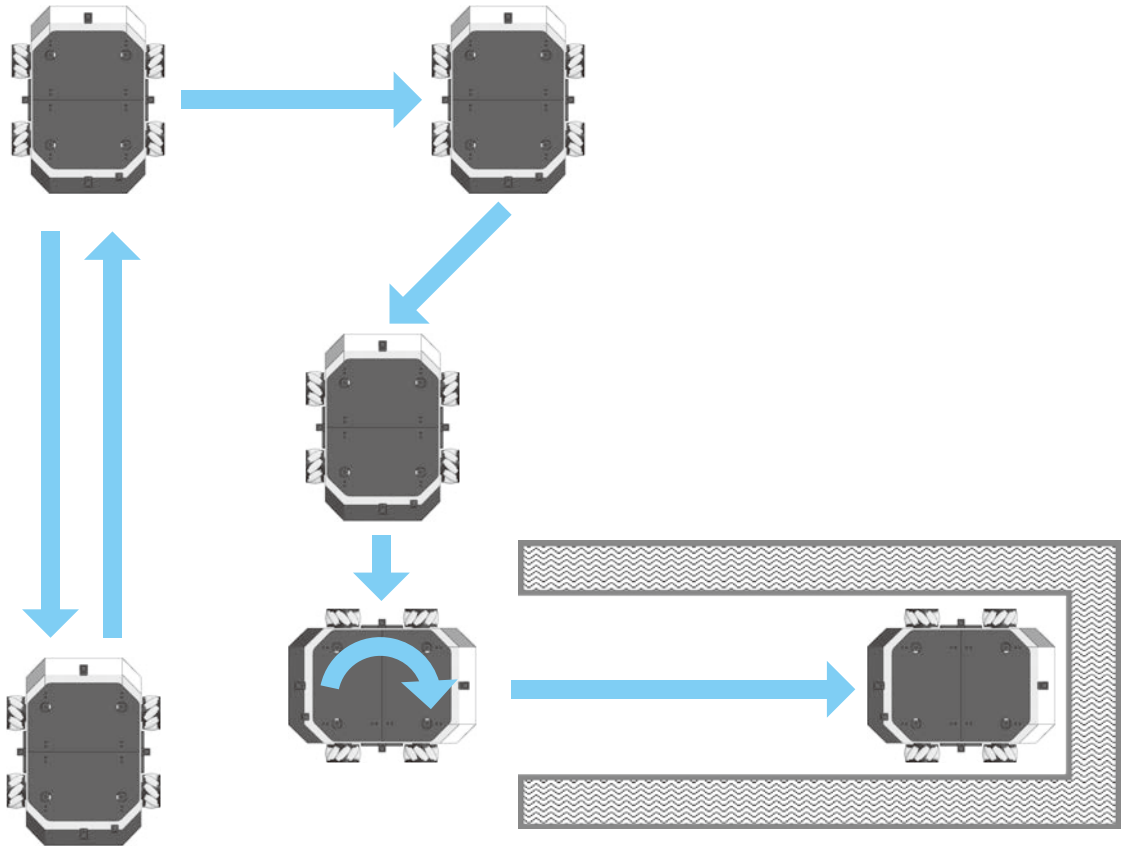

Efficient use of inner space of the AGV

Mecanum wheel AGV can travel in all directions without changing the direction of the wheels. As a result, a large space for placing batteries and control devices is available around the wheels and motors, allowing more efficient use of the inner space of the AGV.

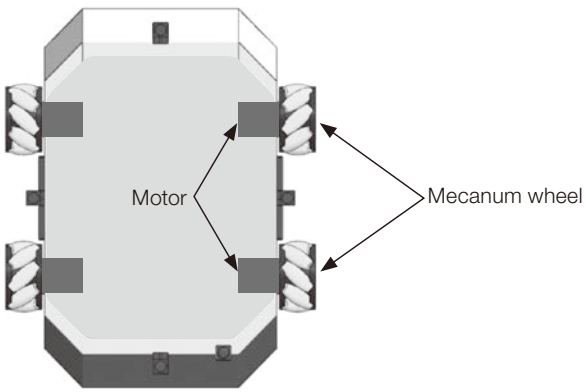

© 2020 Nabtesco Corporation. All rights reserved.

Operating principle of Mecanum wheel

Controlling the rotation direction and speed of the four Mecanum wheels makes it possible to move the AGV freely. The relationship between the wheel rotation direction and AGV traveling direction is described by the figures shown below. The following figures show the vehicle status when viewed from the top.

Travel forward

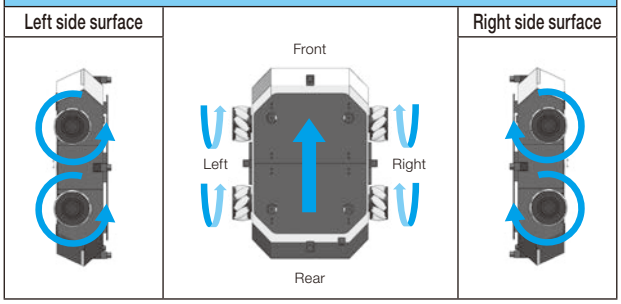

Travel backward

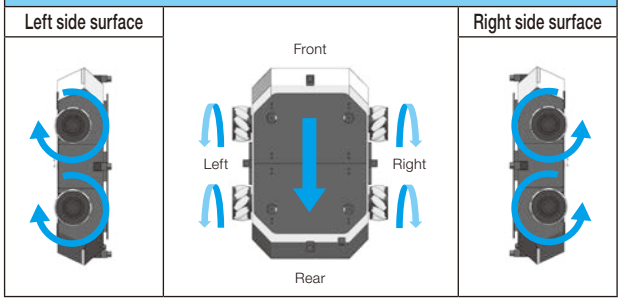

Left traverse

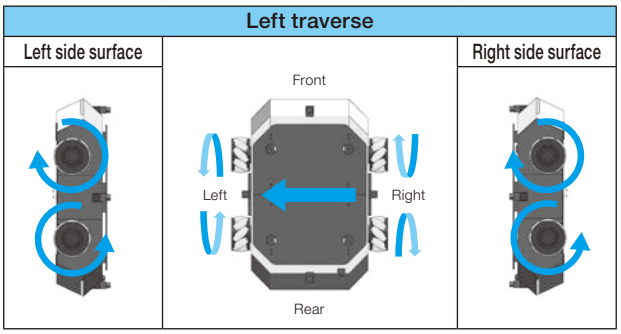

Right traverse

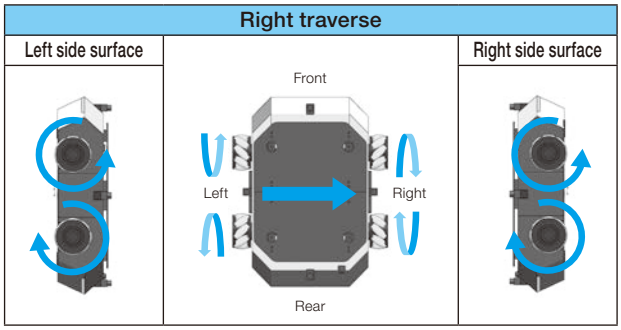

Diagonal movement toward front left

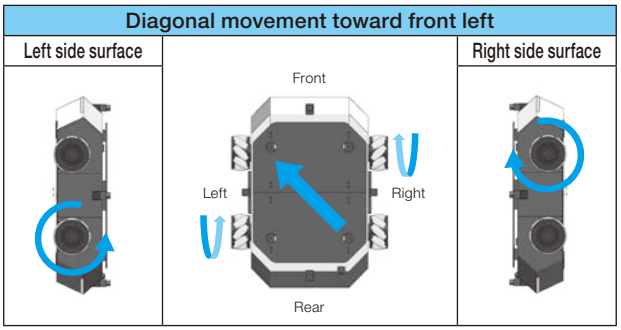

Diagonal movement toward front right

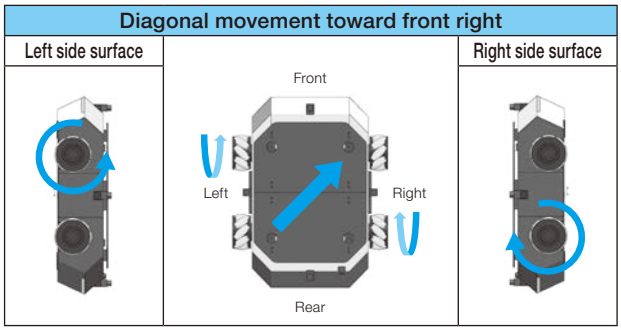

Diagonal movement toward rear left

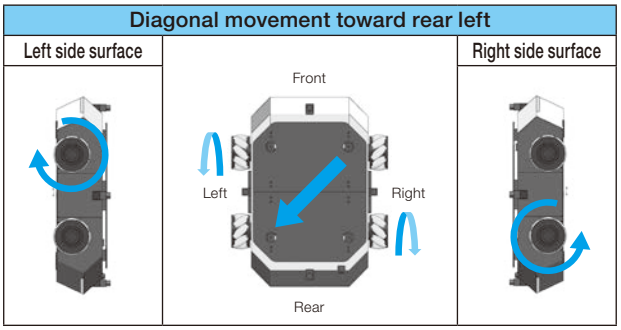

Diagonal movement toward rear right

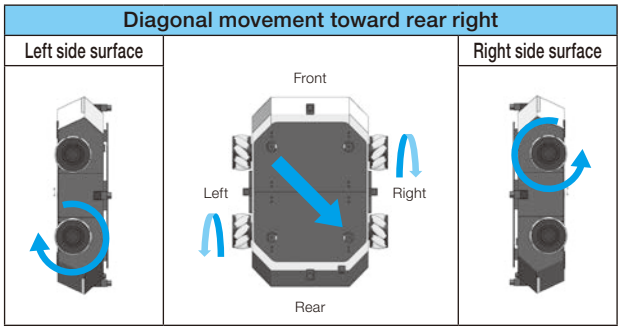

CCW rotation

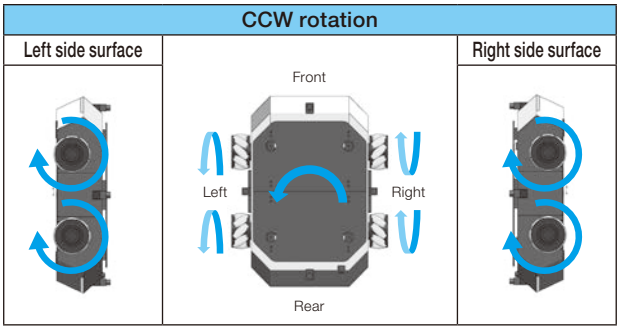

CW rotation

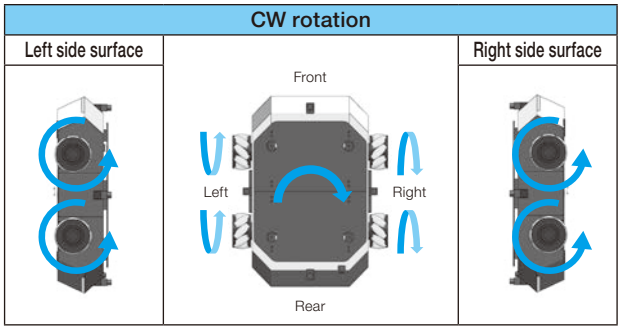

© 2020 Nabtesco Corporation. All rights reserved.

Specifications, External Dimensions

© 2020 Nabtesco Corporation. All rights reserved.

Description of model code

RVW – 10P G L B – 35 – 0A 0A

Series name	Frame number		Product series code		Torsion code		Specification code		Ratio code		Motor flange code	Input shaft code
RVW	Wheel diameter. 7 inch	**7P**	Gearhead	**G**	Left torsion	**L**	7P 15P 20P	**A**	7PG	**30**	2-digit alphanumerical value	2-digit alphanumerical value
	Wheel diameter. 10 inch	**10P**	Wheel	**W**	Right torsion	**R**	10P	**B**	10PG	**35**		
	Wheel diameter. 15 inch	**15P**							15PG	**53**		
	Wheel diameter. 20 inch	**20P**							20PG	**80**		

Notes: 1. Product series code W (wheel) does not include the “ratio code”, “motor flange code”, and “input shaft code”.
2. Product series code W (wheel) indicates spare parts, and they are not sold separately except as spare parts.

Product series code

Two types, gearhead (G) and wheel (W), are available for this product as shown by the product series code (G, W).

Gearhead (RVW-10PG)

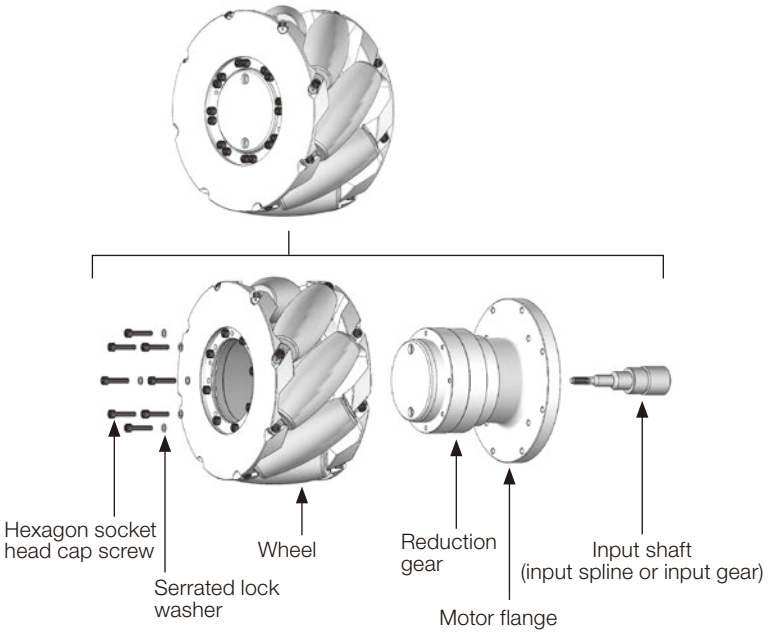

Wheel (RVW-10PW)

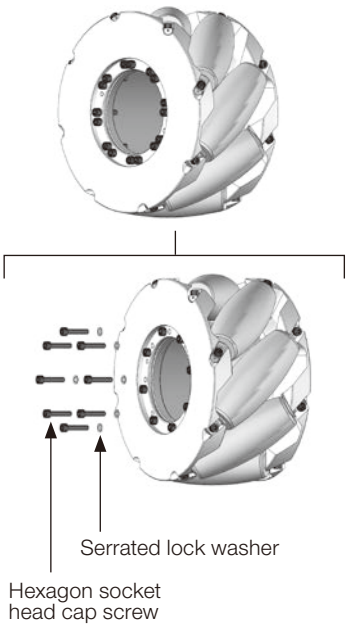

Torsion code

There are two types of barrel orientations, left torsion (L) and right torsion (R), as shown by the torsion code (L, R).

Left torsion (L)

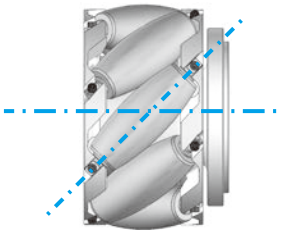

Right torsion (R)

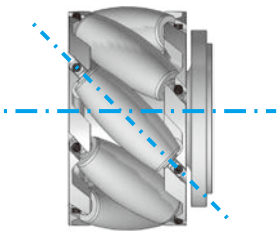

© 2020 Nabtesco Corporation. All rights reserved.

Rating table

Rating Table

Model		RVW-7PG	RVW-10PG	RVW-15PG	RVW-20PG
Allowable loading capacity/wheel	kgf	200	500	1,500	2,500
Wheel diameter	mm	178	254	381	508
Maximum speed (wheel output speed)	m/min (rpm)	60 (107.3)	60 (75.2)	60 (50.1)	60 (37.6)
Speed ratio (ratio code)		30 (30)	34.73 (35)	52.8 (53)	80 (80)
Backlash*1	arc.min.	10	12	12	12
Lost motion*1	arc.min.	10	12	12	12
Rated torque*1	Nm	7	100	350	1,225
Allowable acceleration/deceleration torque*1	Nm	27	300	1,050	2,000
Rolling resistance coefficient		0.05	0.05	0.05	0.04
Mass*2	kg	12	32	104	210

*1 Performance of the reduction gear unit.
*2 Subject to change depending on motor.

Note: It is recommended that the total weight of the vehicle and load is kept to “less than three-fourths of the allowable loading capacity per wheel multiplied by the number of incorporated wheels” after taking variations in load distribution coming from road surface conditions into consideration.

Usable range

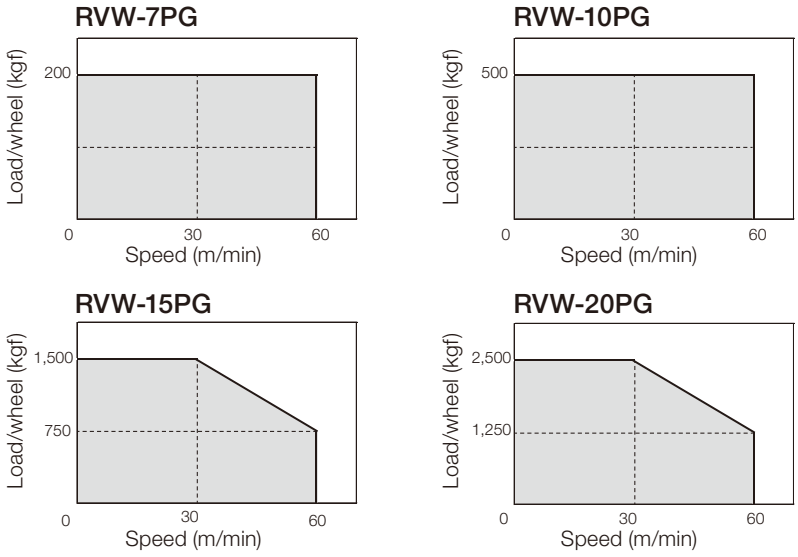

External dimensions

Model		RVW-7PG	RVW-10PG	RVW-15PG	RVW-20PG
Wheel diameter (a)	mm	178	254	381	508
Wheel thickness (b)	mm	96	134	200	278
Total length (c)*1	mm	124	166	234	308

*1 Subject to change depending on motor.

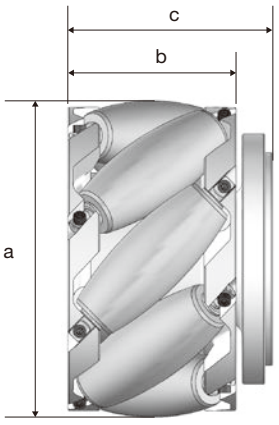

© 2020 Nabtesco Corporation. All rights reserved.

RVW-7PGLA 外形寸法図
RVW-7PGLA Dimension Drawing

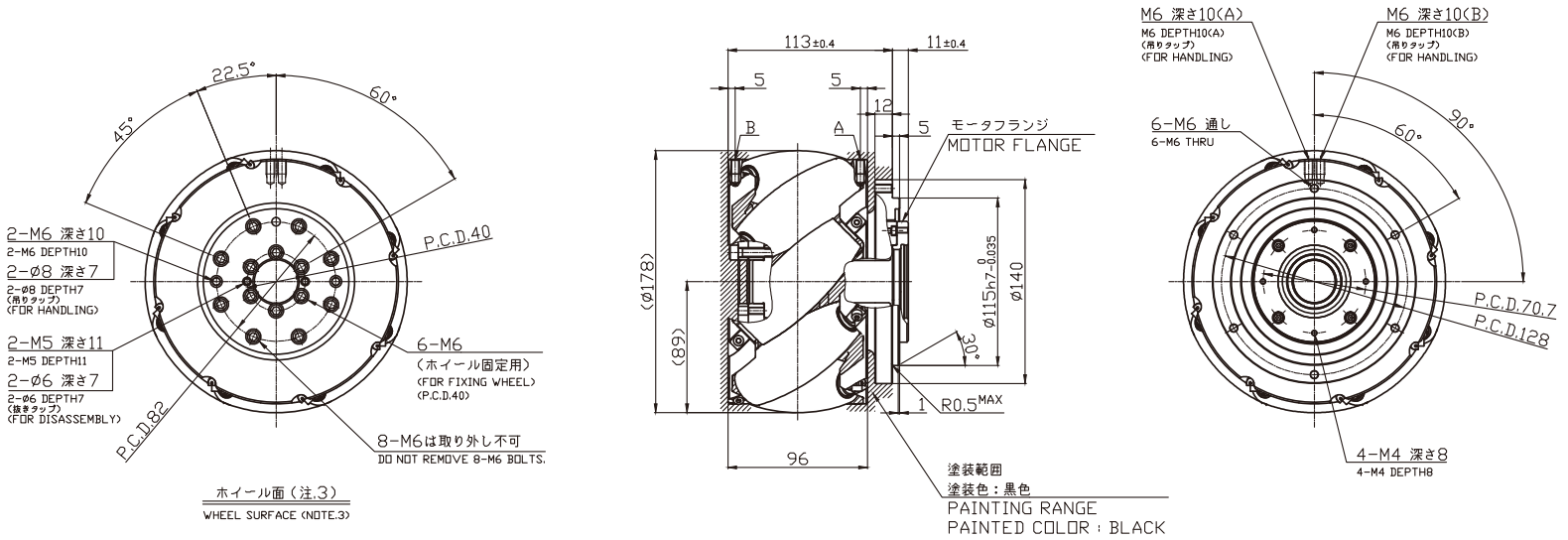

注記
1. 質量には、モータフランジの質量は含まれておりません。
2. モータフランジの形状・寸法・塗装範囲・質量は、モータフランジ図面を参照してください。
3. ホイール面に"Nabtesco"のロゴマークがあります。

NOTE
1. The mass does not include the mass of the motor flange.
2. Refer to the motor flange drawing for the motor flange shape, dimensions, paint range and mass.
3. "Nabtesco" logo mark is on the wheel surface.

速比 Speed Ratio	型式コード Model Code	質量 Mass (kg)	慣性モーメントI Moment of Inertia "I" (I=GD²/4) 入力軸換算値 The Motor Axis Conversion (kg·m²)
30	RVW-7PGLA-30	11.8	$8.76X10^{-5}$

Specifications and dimensions are subject to change without notice.

© 2020 Nabtesco Corporation. All rights reserved.

© 2020 Nabtesco Corporation. All rights reserved.

RVW-7PGRA 外形寸法図
RVW-7PGRA Dimension Drawing

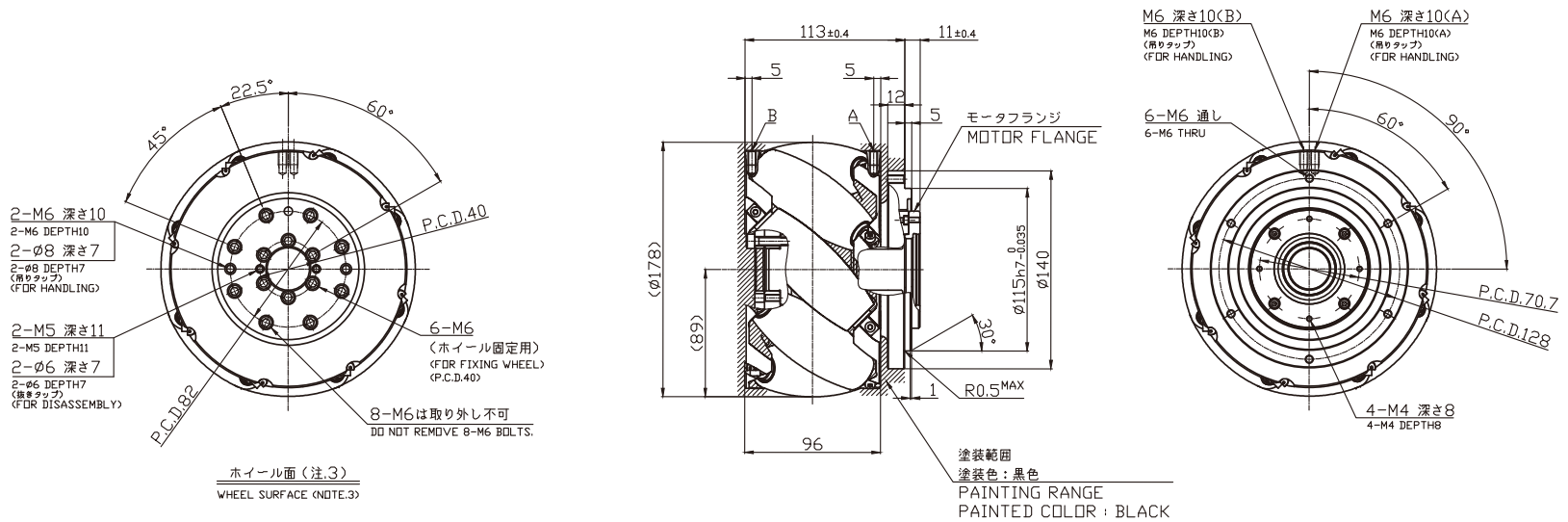

注記
1. 質量には、モータフランジの質量は含まれておりません。
2. モータフランジの形状・寸法・塗装範囲・質量は、モータフランジ図面を参照してください。
3. ホイール面に”Nabtesco”のロゴマークがあります。

NOTE
1. The mass does not include the mass of the motor flange.
2. Refer to the motor flange drawing for the motor flange shape, dimensions, paint range and mass.
3. "Nabtesco" logo mark is on the wheel surface.

速比 Speed Ratio	型式コード Model Code	質量 Mass (kg)	慣性モーメントI Moment of Inertia "I" (I=GD²/4) 入力軸換算値 The Motor Axis Conversion (kg·m²)
30	RVW-7PGRA-30	11.8	$8.76X10^{-5}$

Specifications and dimensions are subject to change without notice.

External dimensions RVW-7PG motor flange

モータフランジ寸法図
Motor Flange Dimension

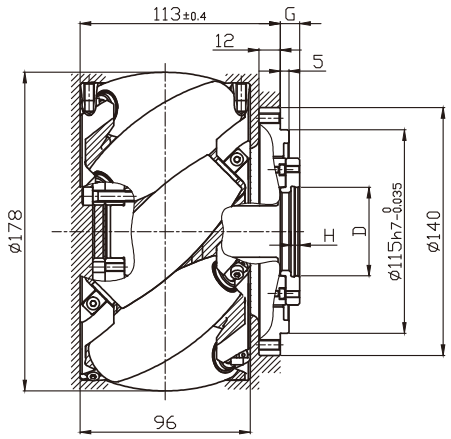

SECTION Z-Z

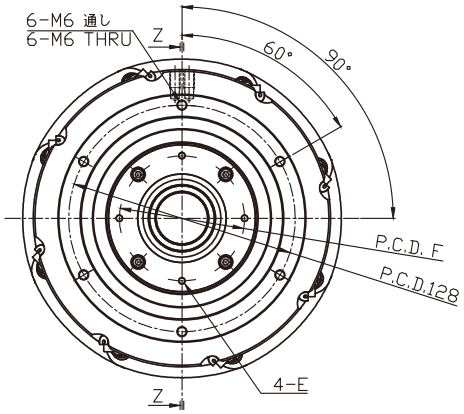

モータ取付部寸法 Dimensions (mm)					質量 Mass (kg)	モータフランジ記号 Motor Flange Code
D	E	F	G	H		
ø50H7 +0.025 0	M4 深さ8 M4 DEPTH8	70.7	11±0.4	5	0.22	0A

注記
1.塗装　塗装色：黒色　塗装範囲部分を ////// に示す。
NOTE
1. ////// area is painted black.

3RD ANGLE PROJECTION

モータフランジ寸法図
Motor Flange Dimension

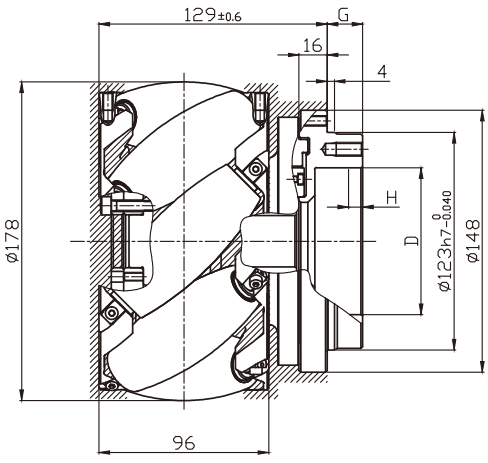

SECTION Z-Z

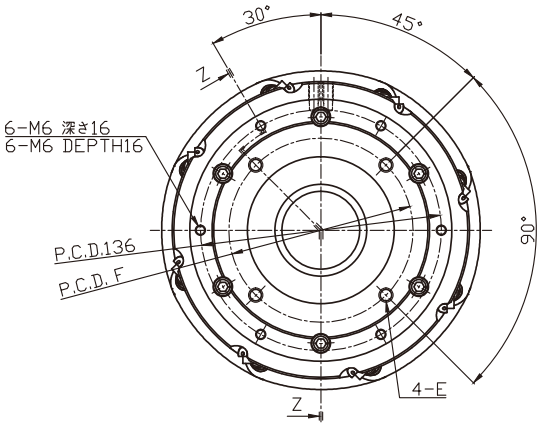

モータ取付部寸法 Dimensions (mm)					質量 Mass (kg)	モータフランジ記号 Motor Flange Code
D	E	F	G	H		
ø83H7 +0.035 0	M8 深さ15 M8 DEPTH15	104	20	5	2.26	0B

注記
1.塗装　塗装色 ：黒色　塗装範囲部分を ////// に示す。
NOTE
1. ////// area is painted black.

3RD ANGLE PROJECTION

Please contact us for shapes not listed above.

© 2020 Nabtesco Corporation. All rights reserved.

External dimensions RVW-7PG motor flange

モータ取付部寸法図
Motor Mounting Part Dimension

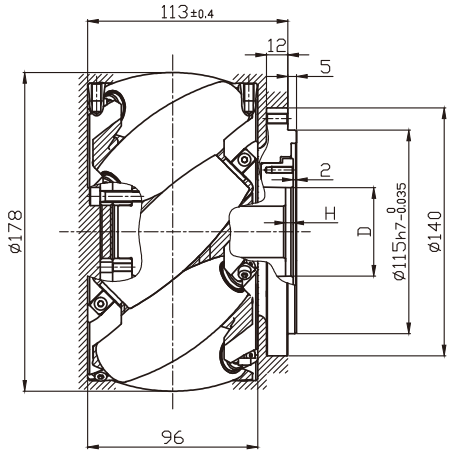

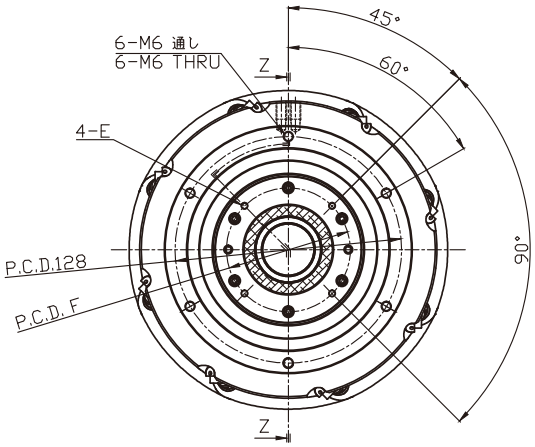

SECTION Z-Z

モータ取付部寸法 Dimensions (mm)				質量 Mass (kg)	モータフランジ記号 Motor Flange Code
D	E	F	H		
ø50H7 +0.025 0	M4 深さ12 M4 DEPTH12	70	4.3		ZZ

注記
1.塗装　塗装色：黒色　塗装範囲部分を////// に示す。

NOTE
1. ////// area is painted black.

3RD ANGLE PROJECTION

Please contact us for shapes not listed above.

© 2020 Nabtesco Corporation. All rights reserved.

External dimensions RVW-7PG input shaft

Straight shaft (without key)

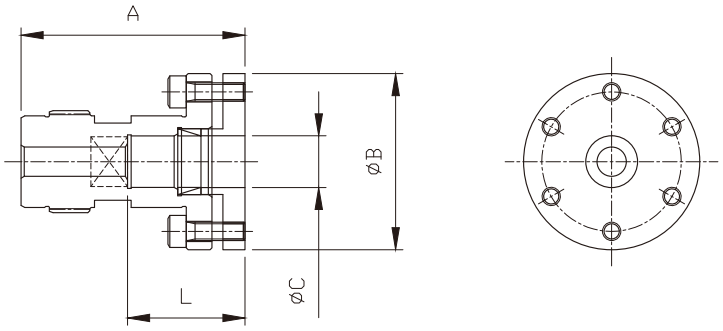

Figure 1

Input shaft dimensions table							
Model code	Shape	A (mm)	ϕ B (mm)	ϕ C (mm)		L (mm)	Input shaft code
RVW-7PG	Figure 1	61	48	14H7	$^{+0.018}_{0}$	32	0C

Straight shaft (with key)

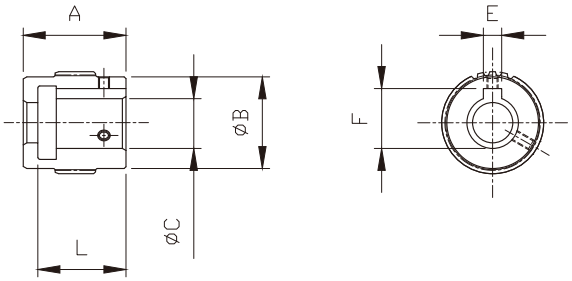

Figure 1

Input shaft dimensions table									
Model code	Shape	A (mm)	ϕ B (mm)	ϕ C (mm)		L (mm)	E (mm)	F (mm)	Input shaft code
RVW-7PG	Figure 1	28	25	14H7	$^{+0.018}_{0}$	24	5	16.3	0A

Straight shaft (D-cut)

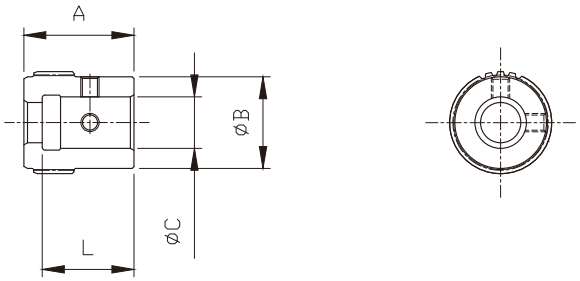

Figure 1

Input shaft dimensions table							
Model code	Shape	A (mm)	ϕ B (mm)	ϕ C (mm)		L (mm)	Input shaft code
RVW-7PG	Figure 1	30	25	14H7	$^{+0.018}_{0}$	25	0B

Please contact us for shapes not listed above.

© 2020 Nabtesco Corporation. All rights reserved.

© 2020 Nabtesco Corporation. All rights reserved.

RVW-10PGLB 外形寸法図
RVW-10PGLB Dimension Drawing

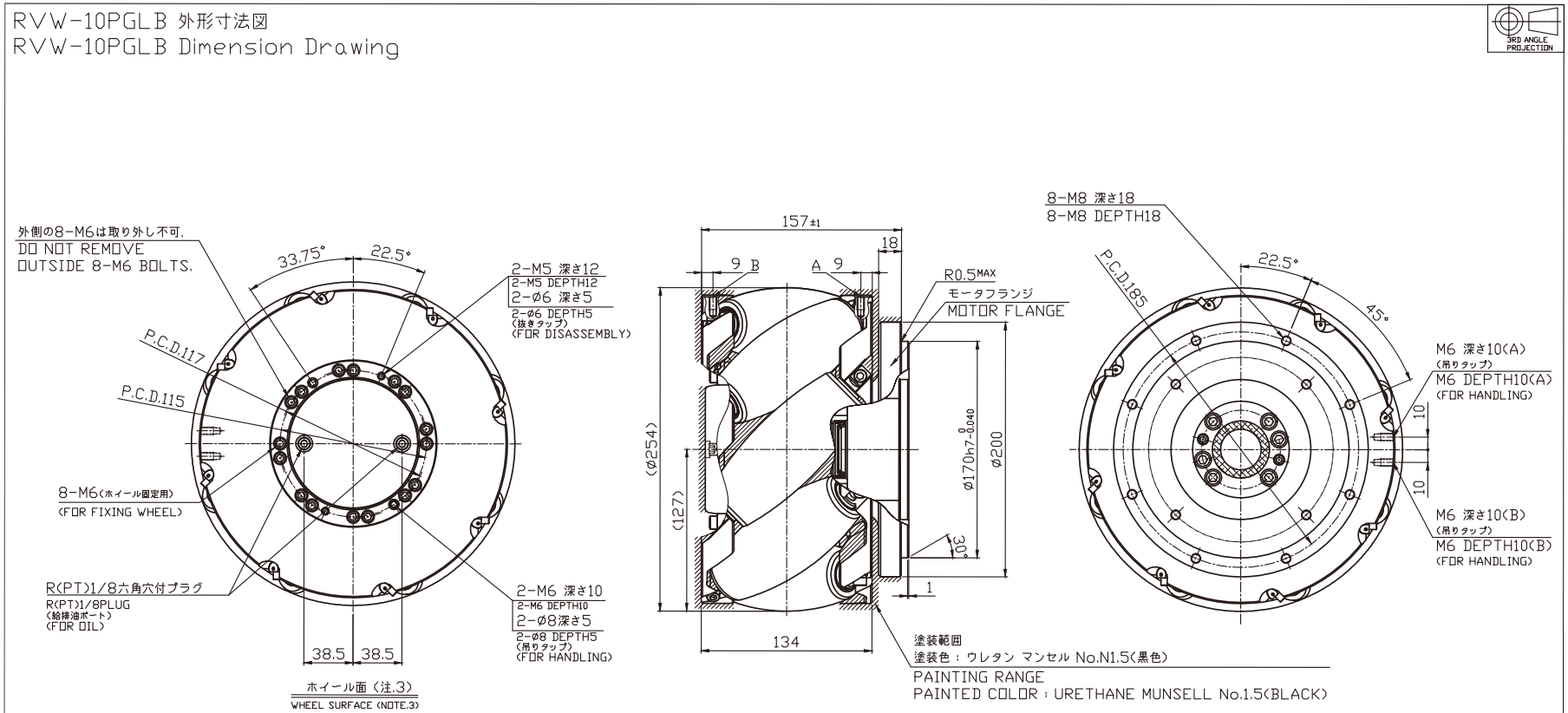

注記
1. 質量には、モータフランジの質量は含まれておりません。
2. モータフランジの形状・寸法・塗装範囲・質量は、モータフランジ図面を参照してください。
3. ホイール面に”Nabtesco”のロゴマークがあります。

NOTE
1. The mass does not include the mass of the motor flange.
2. Refer to the motor flange drawing for the motor flange shape, dimensions, paint range and mass.
3. "Nabtesco" logo mark is on the wheel surface.

速比 Speed Ratio	型式コード Model Code	質量 Mass (kg)	慣性モーメントI Moment of Inertia, "I" (I=GD²/4) 入力軸換算値 The Motor Axis Conversion (kg·m²)
34.73	RVW-10PGLB-35	26.1	1.13×10⁻⁴

Specifications and dimensions are subject to change without notice.

RVW-10PGRB 外形寸法図
RVW-10PGRB Dimension Drawing

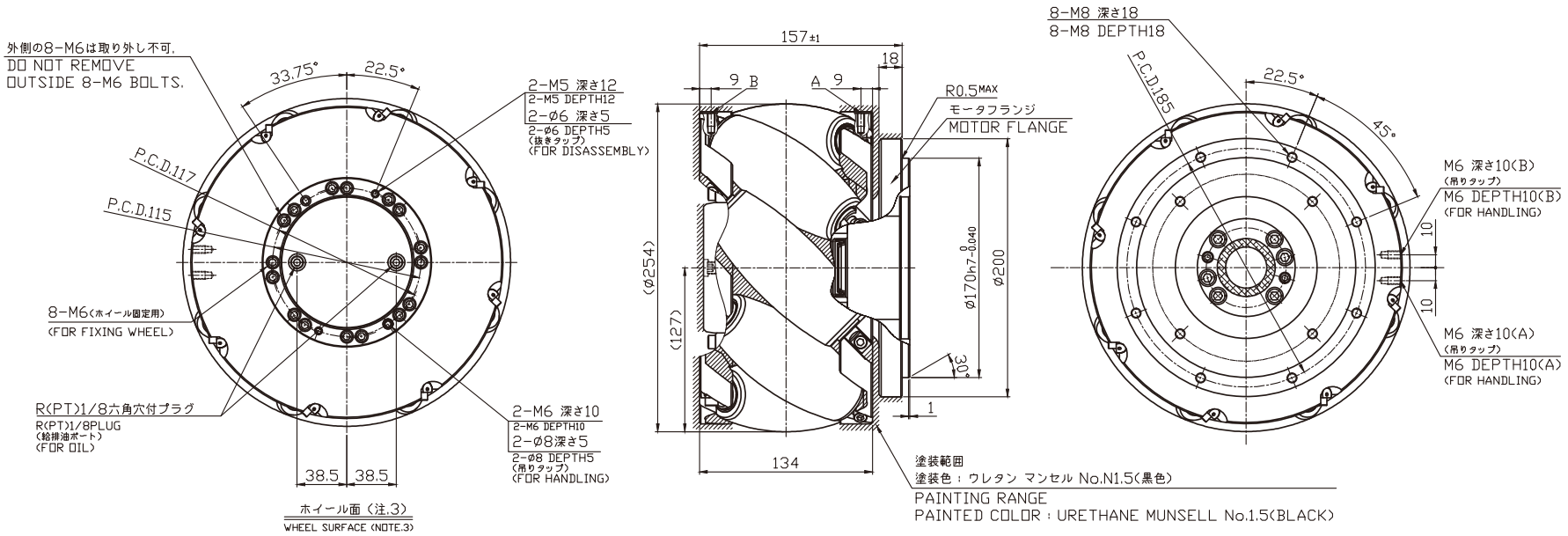

注記
1. 質量には、モータフランジの質量は含まれておりません。
2. モータフランジの形状・寸法・塗装範囲・質量は、モータフランジ図面を参照してください。
3. ホイール面に"Nabtesco"のロゴマークがあります。

NOTE
1. The mass does not include the mass of the motor flange.
2. Refer to the motor flange drawing for the motor flange shape, dimensions, paint range and mass.
3. "Nabtesco" logo mark is on the wheel surface.

速比 Speed Ratio	型式コード Model Code	質量 Mass (kg)	慣性モーメントI Moment of Inertia "I" (I=GD²/4) 入力軸換算値 The Motor Axis Conversion (kg·m²)
34.73	RVW-10PGRB-35	26.1	1.13×10^{-4}

Specifications and dimensions are subject to change without notice.

© 2020 Nabtesco Corporation. All rights reserved.

External dimensions RVW-10PG motor flange

モータフランジ寸法図
Motor Flange Dimension

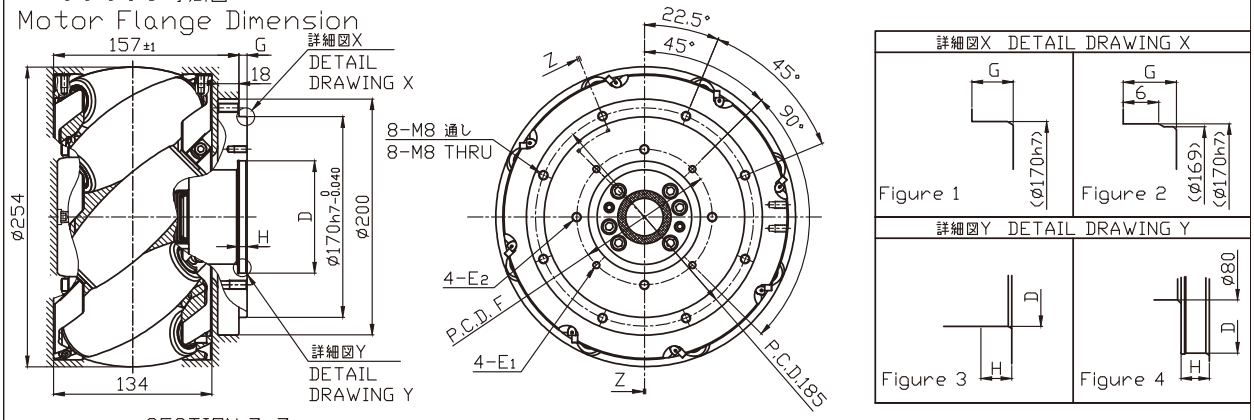

モータ取付部寸法 Dimensions (mm)								質量 Mass (kg)	モータフランジ記号 Motor Flange Code
X	Y	D	E1	E2	F	G	H		
Figure 1	Figure 3	ø80H7 +0.030 0	M6 深さ 11 M6 DEPTH 11		100	6	7	5.7	0F
Figure 1	Figure 4	ø95H7 +0.035 0		M8 深さ 15 下穴通し M8 DEPTH 15 PILOT HOLE THRU	115	7	8	5.7	0E
Figure 1	Figure 4	ø110H7 +0.035 0	M8 深さ 15 下穴通し M8 DEPTH 15 PILOT HOLE THRU		145	6	8	5.4	0A
Figure 2	Figure 4					9	8	5.9	0D

注記
1.塗装 塗装色 エポキシ マンセルNo.N1.5(黒色) 塗装範囲部分を ////// に示す。
NOTE
1. ////// area is painted black.

3RD ANGLE PROJECTION

モータフランジ寸法図
Motor Flange Dimension

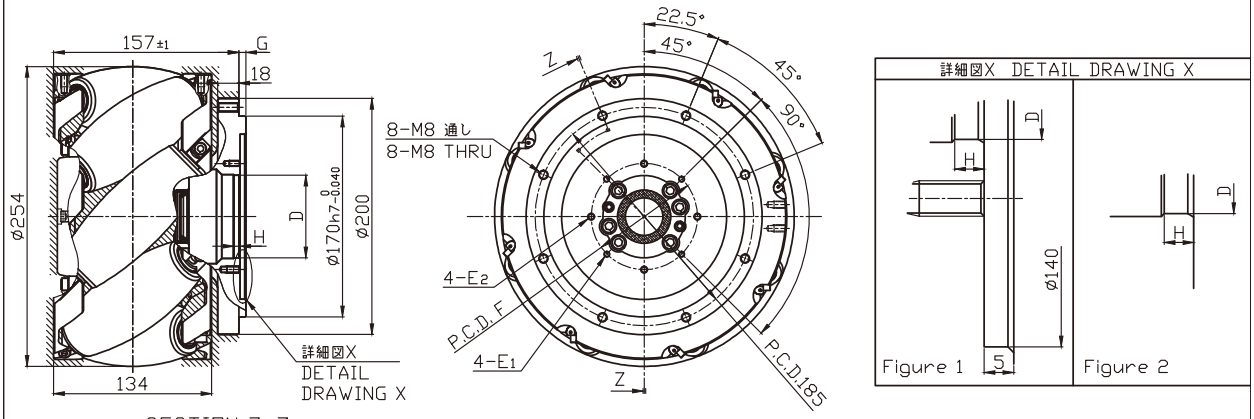

モータ取付部寸法 Dimensions (mm)							質量 Mass (kg)	モータフランジ記号 Motor Flange Code
X	D	E1	E2	F	G	H		
Figure 1	ø70H7 +0.030 0	M5 深さ 9 M5 DEPTH 9	M6 深さ 11 M6 DEPTH 11	90	6	5	5.5	0G
Figure 2		M6 深さ 11 M6 DEPTH 11					5.9	0H

注記
1.塗装 塗装色 エポキシ マンセルNo.N1.5(黒色) 塗装範囲部分を ////// に示す。
NOTE
1. ////// area is painted black.

3RD ANGLE PROJECTION

Please contact us for shapes not listed above.

© 2020 Nabtesco Corporation. All rights reserved.

モータフランジ寸法図
Motor Flange Dimension

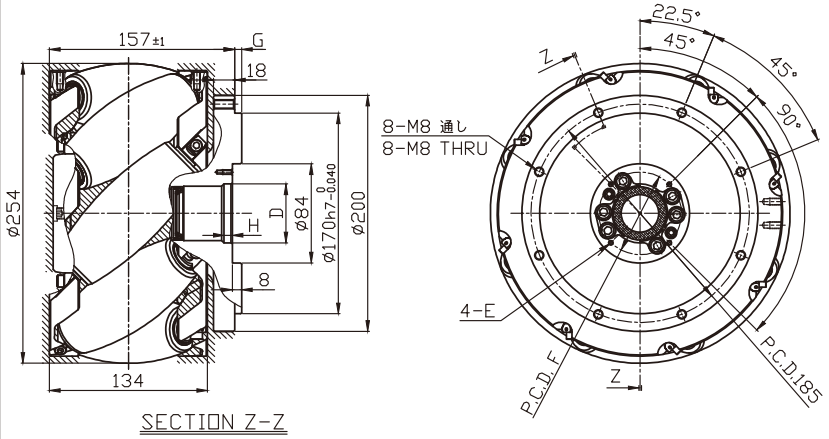

モータ取付部寸法 Dimensions (mm)					質量 Mass (kg)	モータフランジ記号 Motor Flange Code
D	E	F	G	H		
ø50H7 +0.030 0	M4 深さ 8 M4 DEPTH 8	70	6	7	5.5	0C

注記
1.塗装　塗装色 エポキシ マンセルNo.N1.5(黒色)　塗装範囲部分を ////// に示す。
NOTE
1. ////// area is painted black.

3RD ANGLE PROJECTION

Please contact us for shapes not listed above.

© 2020 Nabtesco Corporation. All rights reserved.

Straight shaft (without key)

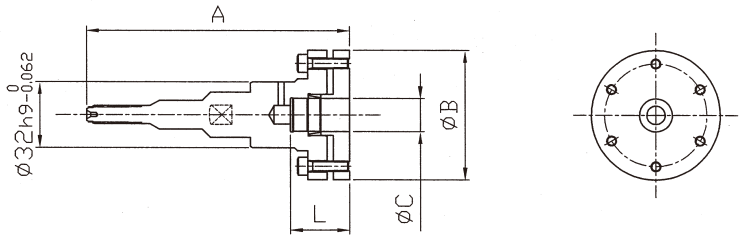

Figure 1

Input shaft dimensions table							
Model code	Shape	A (mm)	ϕ B (mm)	ϕ C (mm)		L (mm)	Input shaft code
RVW-10PG	Figure 1	130.5	63	14H7	+0.018 0	26	0K
		128.5	63	16H7	+0.018 0	29	0J
		133.5	63	19H7	+0.021 0	34	0H
		130.5	63	19H7	+0.021 0	31	0G
		122.4	63	19H7	+0.021 0	37.9	0F
		123.5	63	22H7	+0.021 0	39	0E
		133.5	63	24H7	+0.021 0	39	0D
		123.5	63	24H7	+0.021 0	39	0A

Straight shaft (with key)

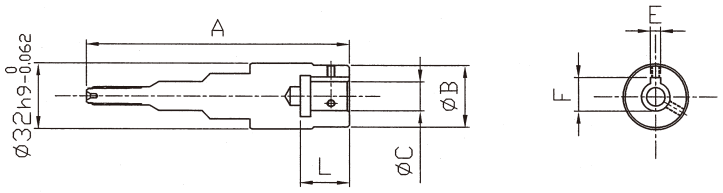

Figure 1

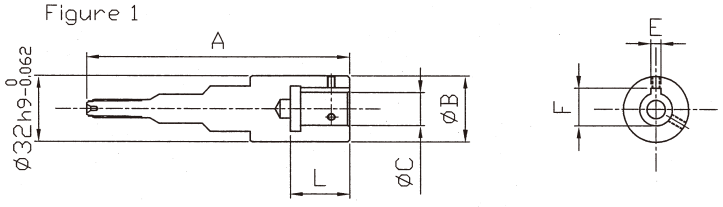

Figure 2

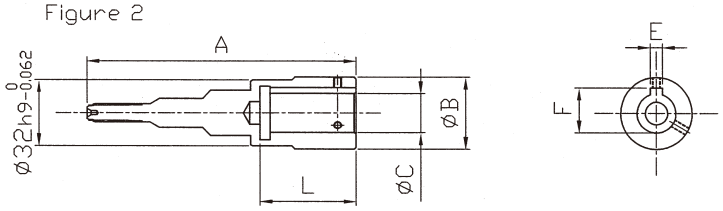

Figure 3

Input shaft dimensions table									
Model code	Shape	A (mm)	ϕ B (mm)	ϕ C (mm)		L (mm)	E (mm)	F (mm)	Input shaft code
RVW-10PG	Figure 1	128.5	30	14H7	+0.018 0	24	5	16.3	0R
	Figure 2	125.5	32	14H7	+0.018 0	24	5	16.3	0C
		128.5	32	16H7	+0.018 0	29	5	18.3	0Q
		131.5	32	16H7	+0.018 0	27	5	18.3	0U
	Figure 3	131.5	35	19H7	+0.021 0	47	6	21.8	0P
		128.5	35	19H7	+0.021 0	29	6	21.8	0N
		122.5	35	19H7	+0.021 0	38	6	21.8	0M
		133.5	40	24H7	+0.021 0	38	8	27.3	0L

Please contact us for shapes not listed above.

© 2020 Nabtesco Corporation. All rights reserved.

External dimensions RVW-15PG main unit

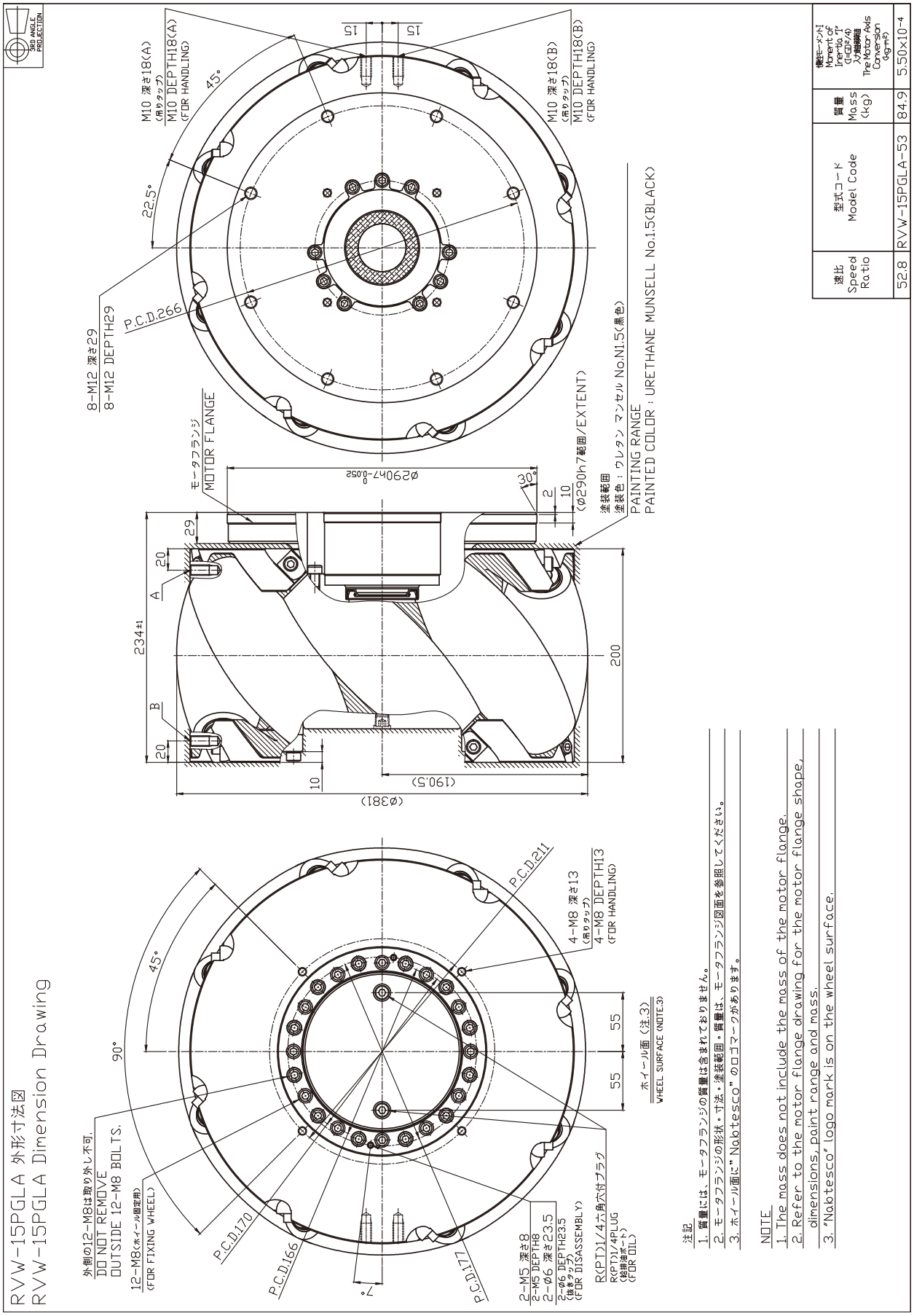

減速比 Speed Ratio	型式コード Model Code	質量 Mass (kg)	慣性モーメント Moment of Inertia (I=GD²/4) 入力軸換算 The Motor Axis Conversion (kg·m²)
52.8	RVW-15PGLA-53	84.9	5.50×10⁻⁴

Specifications and dimensions are subject to change without notice.

© 2020 Nabtesco Corporation. All rights reserved.

© 2020 Nabtesco Corporation. All rights reserved.

RVW-15PGRA 外形寸法図
RVW-15PGRA Dimension Drawing

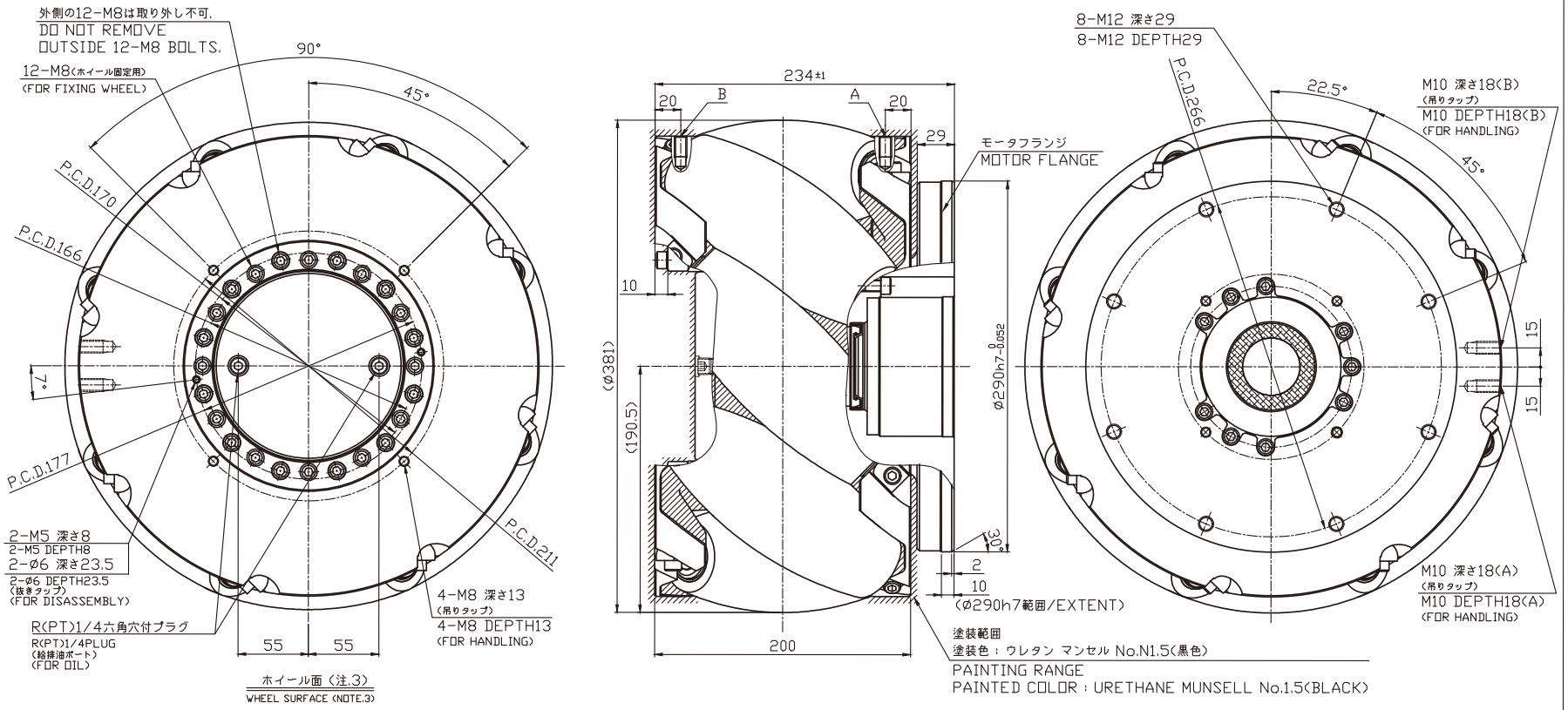

注記
1. 質量には、モータフランジの質量は含まれておりません。
2. モータフランジの形状・寸法・塗装範囲・質量は、モータフランジ図面を参照してください。
3. ホイール面に"Nabtesco"のロゴマークがあります。

NOTE
1. The mass does not include the mass of the motor flange.
2. Refer to the motor flange drawing for the motor flange shape, dimensions, paint range and mass.
3. "Nabtesco" logo mark is on the wheel surface.

速比 Speed Ratio	型式コード Model Code	質量 Mass (kg)	慣性モーメントI Moment of Inertia, "I" (I=GD²/4) 入力軸換算値 The Motor Axis Conversion (kg·m²)
52.8	RVW-15PGRA-53	84.9	5.50×10^{-4}

Specifications and dimensions are subject to change without notice.

External dimensions RVW-15PG motor flange

モータフランジ寸法図

Motor Flange Dimension

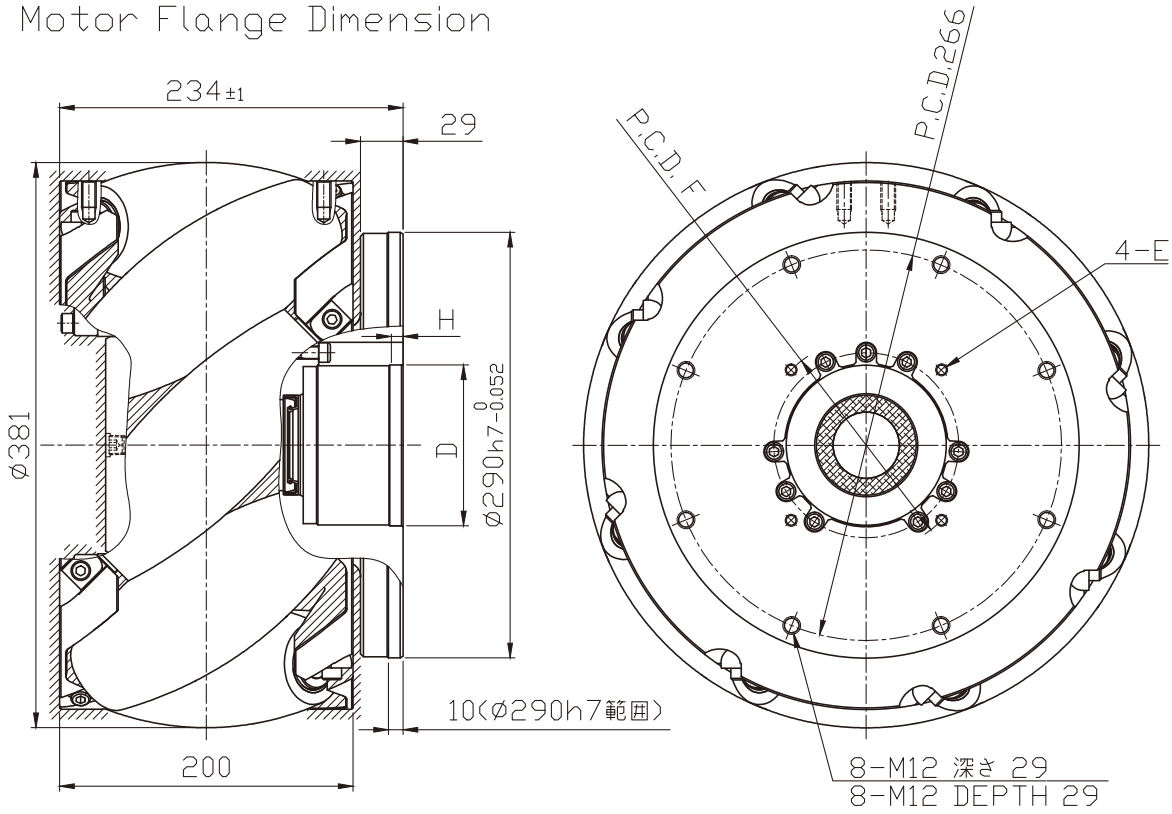

モータ取付部寸法 Dimensions (mm)				質量 Mass (kg)	モータフランジ記号 Motor Flange Code
D	E	F	H		
ø110H7 +0.035 0	M8 深さ 15 M8 DEPTH 15	145	8	18.0	0A

注記

1.塗装　塗装色 エポキシ マンセルNo.N1.5(黒色)　塗装範囲部分を ///// に示す。

NOTE

1. ///// area is painted black.

3RD ANGLE PROJECTION

Please contact us for shapes not listed above.

© 2020 Nabtesco Corporation. All rights reserved.

Straight shaft (with key)

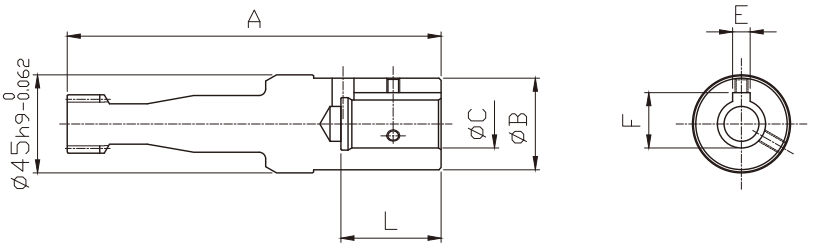

Figure 1

Input shaft dimensions table									
Model code	Shape	A (mm)	ϕ B (mm)	ϕ C (mm)		L (mm)	E (mm)	F (mm)	Input shaft code
RVW-15PG	Figure 1	171.5	42	22H7	$^{+0.021}_{0}$	46	8	25.3	0B

Please contact us for shapes not listed above.

© 2020 Nabtesco Corporation. All rights reserved.

External dimensions RVW-20PG main unit

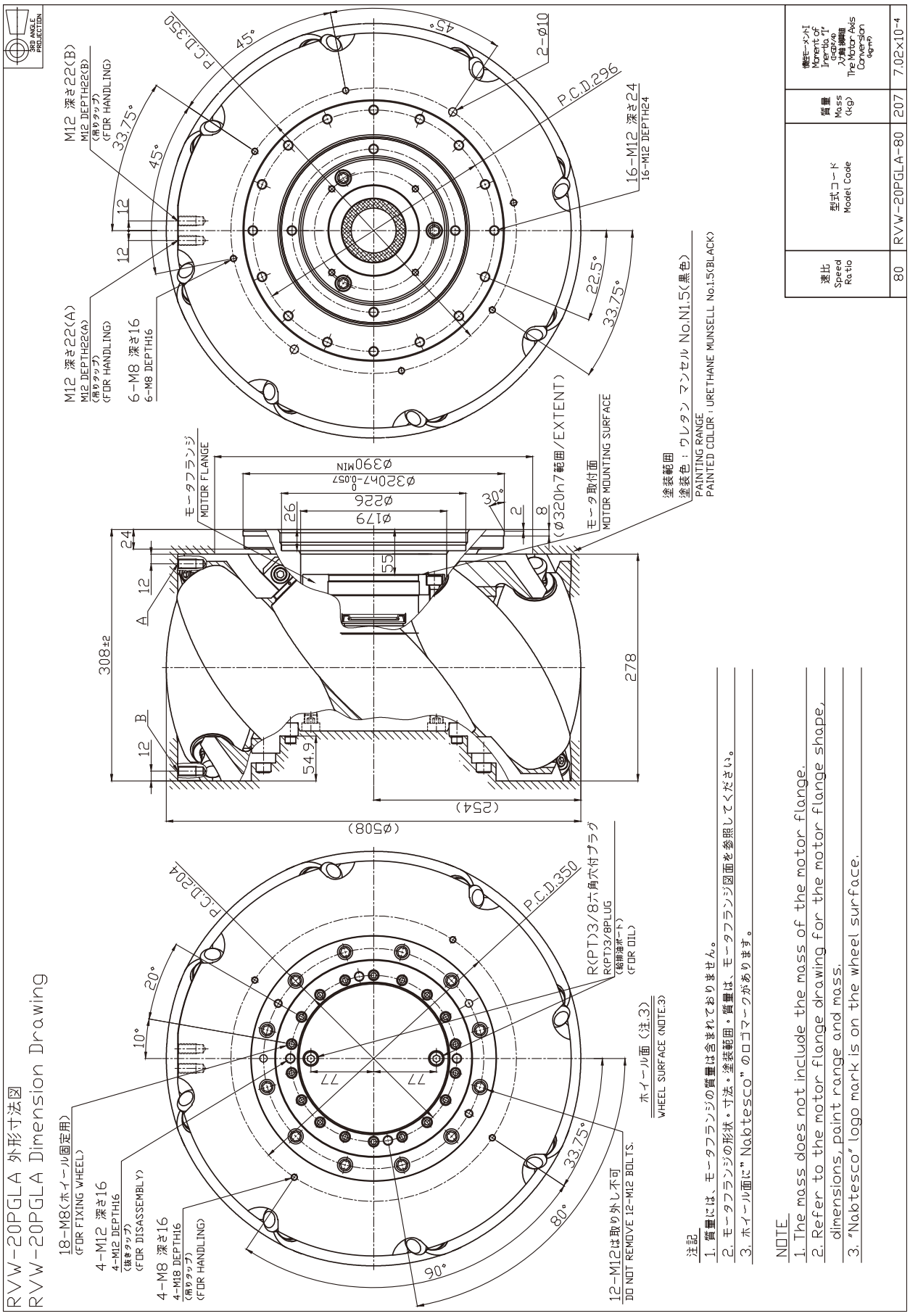

速比 Speed Ratio	型式コード Model Code	質量 Mass (kg)	慣性モーメント Moment of Inertia (kgm²) 入力軸換算値 The Motor Axis Conversion
80	RVW-20PGLA-80	207	7.02×10⁻⁴

Specifications and dimensions are subject to change without notice.

© 2020 Nabtesco Corporation. All rights reserved.

External dimensions RVW-20PG main unit

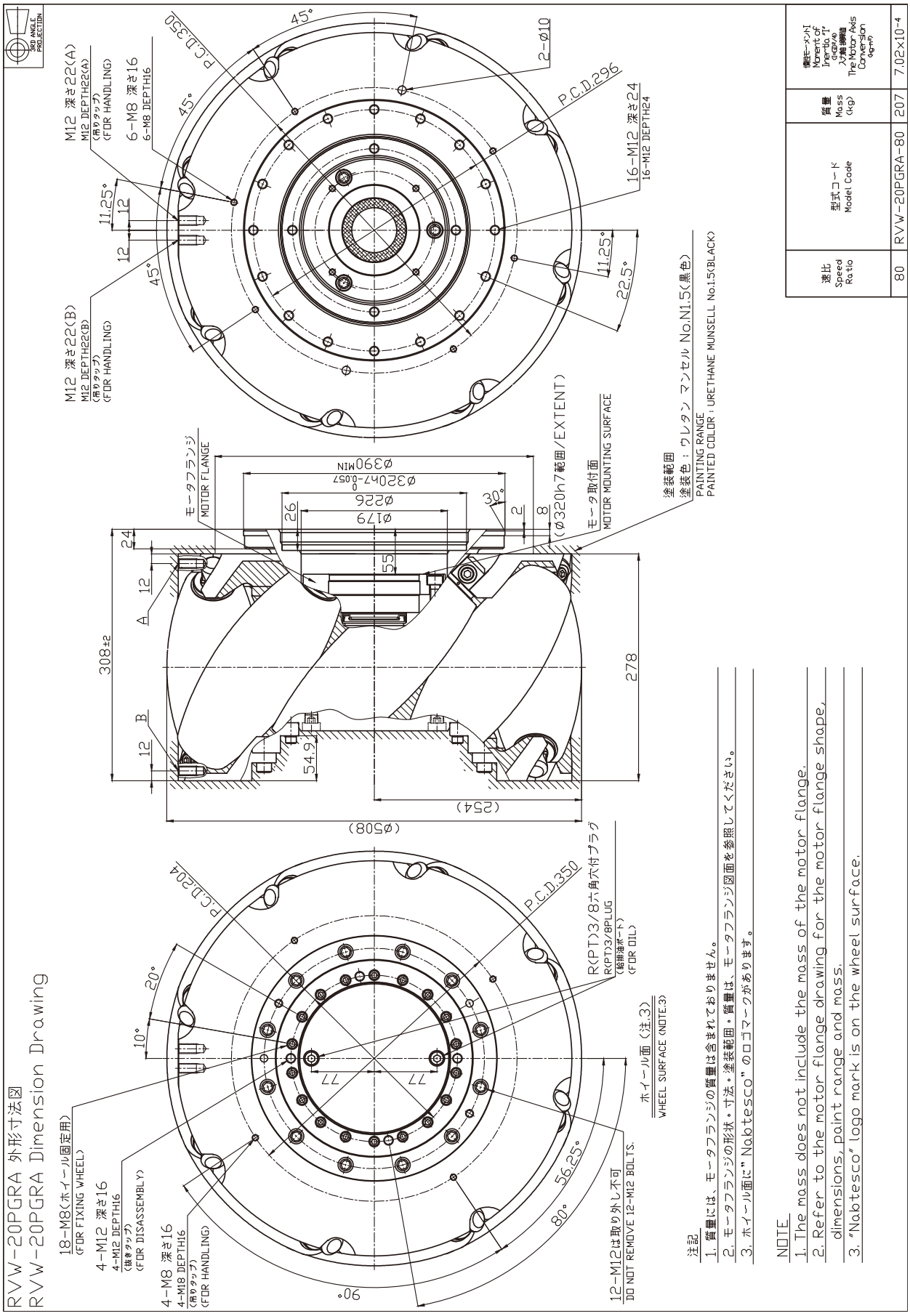

注記
1. 質量には、モータフランジの質量は含まれておりません。
2. モータフランジの形状・寸法・塗装範囲・質量は、モータフランジ図面を参照してください。
3. ホイール面に"Nabtesco"のロゴマークがあります。

NOTE
1. The mass does not include the mass of the motor flange.
2. Refer to the motor flange drawing for the motor flange shape, dimensions, paint range and mass.
3. "Nabtesco" logo mark is on the wheel surface.

Specifications and dimensions are subject to change without notice.

© 2020 Nabtesco Corporation. All rights reserved.

External dimensions RVW-20PG motor flange

モータフランジ寸法図

Motor Flange Dimension

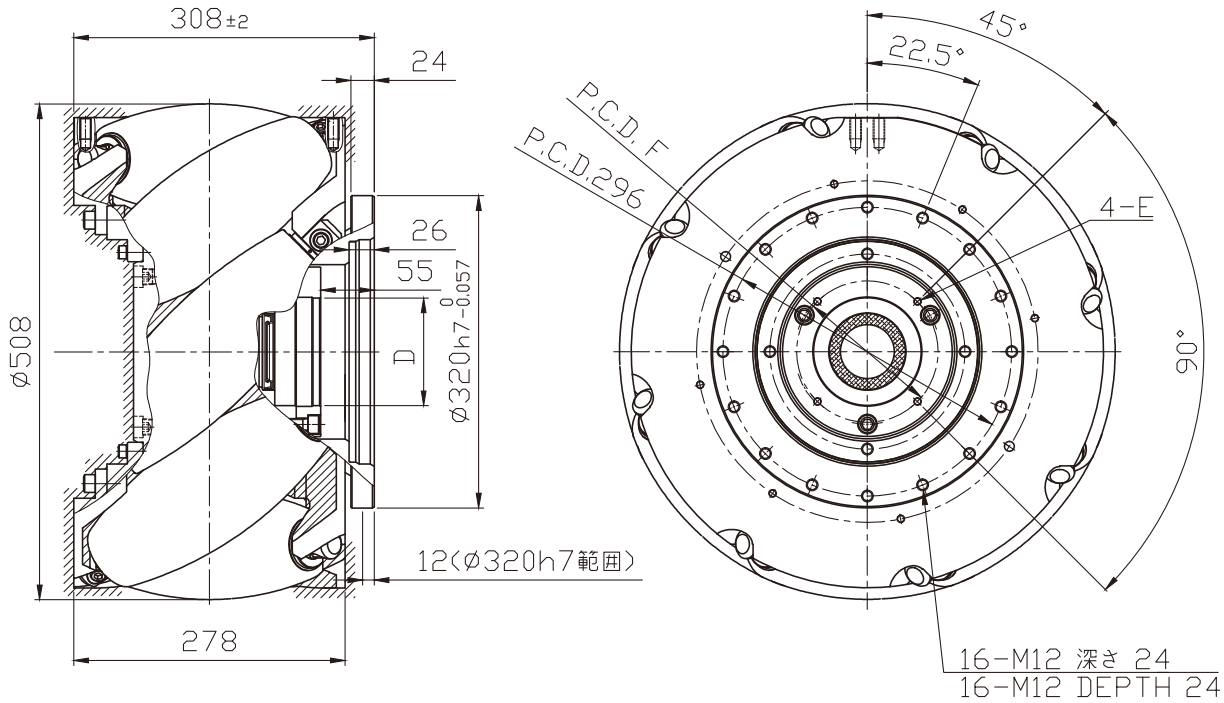

モータ取付部寸法 Dimensions (mm)			質量 Mass (kg)	モータフランジ記号 Motor Flange Code
D	E	F		
Ø110H7 +0.035 0	M8 深さ 15 M8 DEPTH 15	145	2.7	0A

注記

1.塗装　塗装色 エポキシ マンセルNo.N1.5(黒色)　塗装範囲部分を ////// に示す。

NOTE

1. ////// area is painted black.

3RD ANGLE PROJECTION

Please contact us for shapes not listed above.

© 2020 Nabtesco Corporation. All rights reserved.

Straight shaft (with key)

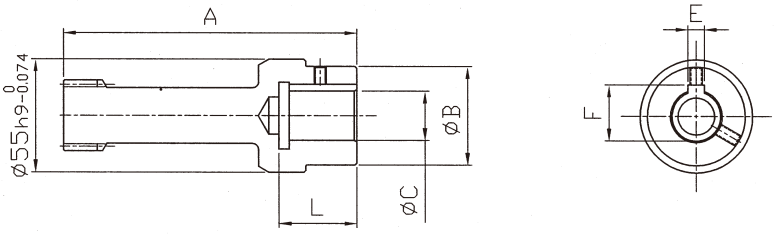

Figure 1

Input shaft dimensions table									
Model code	Shape	A (mm)	ϕ B (mm)	ϕ C (mm)		L (mm)	E (mm)	F (mm)	Input shaft code
RVW-20PG	Figure 1	143.5	48	24H7	$^{+0.021}_{0}$	38	8	27.3	AN

Please contact us for shapes not listed above.

© 2020 Nabtesco Corporation. All rights reserved.

Selection table

Straight shaft (without key)

Model code
RVW-7PG

Motor flange, input shaft selection table									
Motor shaft diameter (mm)	Motor shaft diameter tolerance	Motor shaft length (mm)	Motor mounting pilot diameter (mm)	Motor mounting pilot tolerance	Motor mounting pilot length (mm)	Bolt P.C.D. (mm)	Bolt size	Motor flange code	Input shaft code
ϕ14	h7	37	ϕ83	h7	2	104	M8	0B	0C

Straight shaft (with key)

Model code
RVW-7PG

Motor flange, input shaft selection table									
Motor shaft diameter (mm)	Motor shaft diameter tolerance	Motor shaft length (mm)	Motor mounting pilot diameter (mm)	Motor mounting pilot tolerance	Motor mounting pilot length (mm)	Bolt P.C.D. (mm)	Bolt size	Motor flange code	Input shaft code
ϕ14	h6	30	ϕ50	h7	3	70	M4	ZZ	0A

Straight shaft (D-cut)

Model code
RVW-7PG

Motor flange, input shaft selection table									
Motor shaft diameter (mm)	Motor shaft diameter tolerance	Motor shaft length (mm)	Motor mounting pilot diameter (mm)	Motor mounting pilot tolerance	Motor mounting pilot length (mm)	Bolt P.C.D. (mm)	Bolt size	Motor flange code	Input shaft code
ϕ14	h6	31	ϕ50	h7	3	70.7	M4	0A	0B

Straight shaft (without key)

Model code
RVW-10PG

Motor flange, input shaft selection table									
Motor shaft diameter (mm)	Motor shaft diameter tolerance	Motor shaft length (mm)	Motor mounting pilot diameter (mm)	Motor mounting pilot tolerance	Motor mounting pilot length (mm)	Bolt P.C.D. (mm)	Bolt size	Motor flange code	Input shaft code
ϕ14	h6	30	ϕ70	h7	3	90	M5 or M6	0G	0K
ϕ16	h6	40	ϕ80	h7	5	100	M6	0F	0J
ϕ16	h6	40	ϕ110	h7	3.5	145	M8	0A	0J
ϕ19	h6	35	ϕ70	h7	3	90	M5	0G	0G
ϕ19	h6	40	ϕ70	h7	3	90	M6	0H	0G
ϕ19	h6	40	ϕ110	h7	3.5	145	M8	0A	0H
ϕ19	h6	55	ϕ95	h7	3	115	M8	0E	0F
ϕ19	h6	58	ϕ110	h7	6	145	M8	0D	0F
ϕ22	h6	55	ϕ110	h7	6	145	M8	0A	0E
ϕ22	h6	58	ϕ110	h7	6	145	M8	0D	0E
ϕ24	h6	45	ϕ95	h7	3	115	M6 or M8	0E	0D
ϕ24	h6	55	ϕ110	h7	3	145	M8	0A	0A

Straight shaft (with key)

Model code
RVW-10PG

Motor flange, input shaft selection table									
Motor shaft diameter (mm)	Motor shaft diameter tolerance	Motor shaft length (mm)	Motor mounting pilot diameter (mm)	Motor mounting pilot tolerance	Motor mounting pilot length (mm)	Bolt P.C.D. (mm)	Bolt size	Motor flange code	Input shaft code
ϕ14	h6	30	ϕ50	h7	3	70	M4	0C	0C
ϕ14	h6	30	ϕ70	h7	3	90	M5 or M6	0G	0R
ϕ16	h6	40	ϕ80	h7	5	100	M6	0F	0Q
ϕ16	h6	35	ϕ80	h7	3	100	M6	0F	0U
ϕ16	h6	40	ϕ110	h7	3.5	145	M8	0A	0Q
ϕ19	h6	35	ϕ70	h7	3	90	M5	0G	0N
ϕ19	h6	40	ϕ70	h7	3	90	M6	0H	0N
ϕ19	h6	40	ϕ110	h7	3.5	145	M8	0A	0N
ϕ19	h6	55	ϕ95	h7	3	115	M8	0E	0P
ϕ19	h6	58	ϕ110	h7	6	145	M8	0D	0M
ϕ24	h6	45	ϕ95	h7	3	115	M6 or M8	0E	0L

Straight shaft (with key)

Model code
RVW-15PG

Motor flange, input shaft selection table									
Motor shaft diameter (mm)	Motor shaft diameter tolerance	Motor shaft length (mm)	Motor mounting pilot diameter (mm)	Motor mounting pilot tolerance	Motor mounting pilot length (mm)	Bolt P.C.D. (mm)	Bolt size	Motor flange code	Input shaft code
ϕ22	h6	55	ϕ110	h7	4	145	M8	0A	0B

Straight shaft (with key)

Model code
RVW-20PG

Motor flange, input shaft selection table									
Motor shaft diameter (mm)	Motor shaft diameter tolerance	Motor shaft length (mm)	Motor mounting pilot diameter (mm)	Motor mounting pilot tolerance	Motor mounting pilot length (mm)	Bolt P.C.D. (mm)	Bolt size	Motor flange code	Input shaft code
ϕ24	h6	58	ϕ110	h7	3	145	M8	0A	AN

Note: Motor shaft length (mm): The length between the motor mounting surface and the motor shaft edge
Please contact us for shapes not listed above.

© 2020 Nabtesco Corporation. All rights reserved.

Technical Information

© 2020 Nabtesco Corporation. All rights reserved.

Considering the use of RVW® series

This product is a drive unit for vehicles that can travel in all directions. To exhibit its performance satisfactorily, it is necessary to strictly comply with various restrictions and select an appropriate model. Please read this technical document thoroughly and select and adopt an appropriate model based on the actual operating environment, method, and conditions your facility.

Export

- When this product is exported from Japan, it may be subject to the export regulations provided in the “Foreign Exchange Order and Export Trade Control Order”. Be sure to take sufficient precautions and perform the required export procedures in advance if the final operating party is related to the military or the product is to be used in the manufacture of weapons, etc.

Application

- Intended use of this product (intended purpose)
  This product was designed and manufactured as a drive unit for mobile industrial vehicles or an autonomous mobile robots (hereafter referred to as a “vehicle”). (The product decelerates the rotation of the motor, amplifies the drive torque necessary to drive the vehicle, and transfers it onto the road surface.) Do not use this product for other purposes.
- If failure or malfunction of the product may directly endanger human life or if it is used in units which may injure the human body (atomic energy facilities, space equipment, transportation equipment, medical equipment, safety units, etc.), examination of individual situations is required. Contact our agent or nearest business office in such a case.

Safety measures

- Although this product has been manufactured under strict quality control, a mistake in operation or misuse can result in breakdown or damage, or an accident resulting in injury or death. Be sure to take all appropriate safety measures, e.g., the installation of independent safeguards, based on vehicle safety standards specified by JIS, ISO, and others.

Product specifications indicated in this catalog

- The specifications indicated in this catalog are based on Nabtesco evaluation methods. This product should only be used after confirming that it is appropriate for the operating conditions of your system.

Operating environment

Use this product under the following environment:
- Location where the ambient temperature is between -10°C to 40°C.
- Location where the humidity is less than 85% and no condensation occurs.
- Location where the altitude is less than 1000 m.
- Well-ventilated location

Do not use this product at the following locations.
- Location where a lot of dust is collected.
- Location where a lot of oil, water, or sand is collected.
- Location that can be affected by the direct sunlight or ultraviolet ray
- Outdoors that can be directly affected by wind and rain
- Location near to areas that contain combustible, explosive, or corrosive gases and flammable materials.
- Location where the magnetic fields or vibration occur

Note 1: If the required operating environment cannot be established/met, contact us in advance.
2: When using the product under special conditions (clean room, equipment for food, concentrated alkali, high-pressure steam, etc.), contact our agent or nearest business office in advance.

Maintenance

- The wheel is a consumable part. A vehicle structure that allows replacement of the wheel should be used.
- The standard replacement time for lubricant is 20,000 hours. However, when operation involves a reduction gear surface temperature above 40°C, the state of degradation of the lubricant should be checked in advance of that and the lubricant replaced earlier as necessary.
  Since the tapped hole for injecting/draining lubricant is used to replace the lubricant, a vehicle structure that allows use of this tapped hole should be used.

Reduction gear temperature

- When the reduction gear is used under high load and at a high duty ratio, it may overheat and the surface temperature may exceed the allowable temperature. Be aware of conditions so that the surface temperature of the reduction gear does not exceed 60°C while it is in operation. There is a possibility of damage (to the product) if the surface temperature exceeds 60°C.

Manuals

- Safety information and detail product instructions are indicated in the operation manual.

© 2020 Nabtesco Corporation. All rights reserved.

Glossary

Self-propelled industrial vehicle

A self-propelled industrial vehicle that conforms to the following classifications in JIS D 6201:2017.

1) Classification by drive power - Electric vehicle
2) Classification by operation type - Pedestrian controlled type or driverless type

Autonomous mobile robot

A robot that can travel autonomously.

Note: Autonomous traveling refers to movement executed by recognizing and understanding the surrounding environment without receiving external supports.

Allowable loading capacity

Maximum radial load that one piece of this product can withstand.

Maximum speed

Maximum speed of the vehicle.

Lost motion, backlash

When torque is applied to the output shaft while the input shaft is fixed, torsion is generated on the output shaft according to the torque value. The torsion can be shown in the hysteresis curves.

The torsion angle at the mid point of the hysteresis curve width within ±3% of the rated torque is referred to as “lost motion”.

The torsion angle width of the hysteresis curve at zero torque is referred to as “backlash”.

■ Hysteresis curve

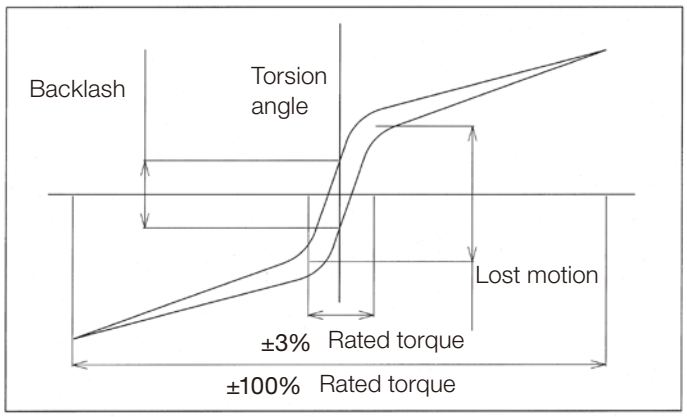

Rolling resistance coefficient

The ratio of the rolling resistance (loss) to the load applied to the wheel is referred to as the “rolling resistance coefficient”.

No-load running torque

The torque that is required to run the reduction gear without load is referred to as “no-load running torque”.

Total weight

The total of the vehicle weight and load weight.

© 2020 Nabtesco Corporation. All rights reserved.

Product model and motor selection flowchart

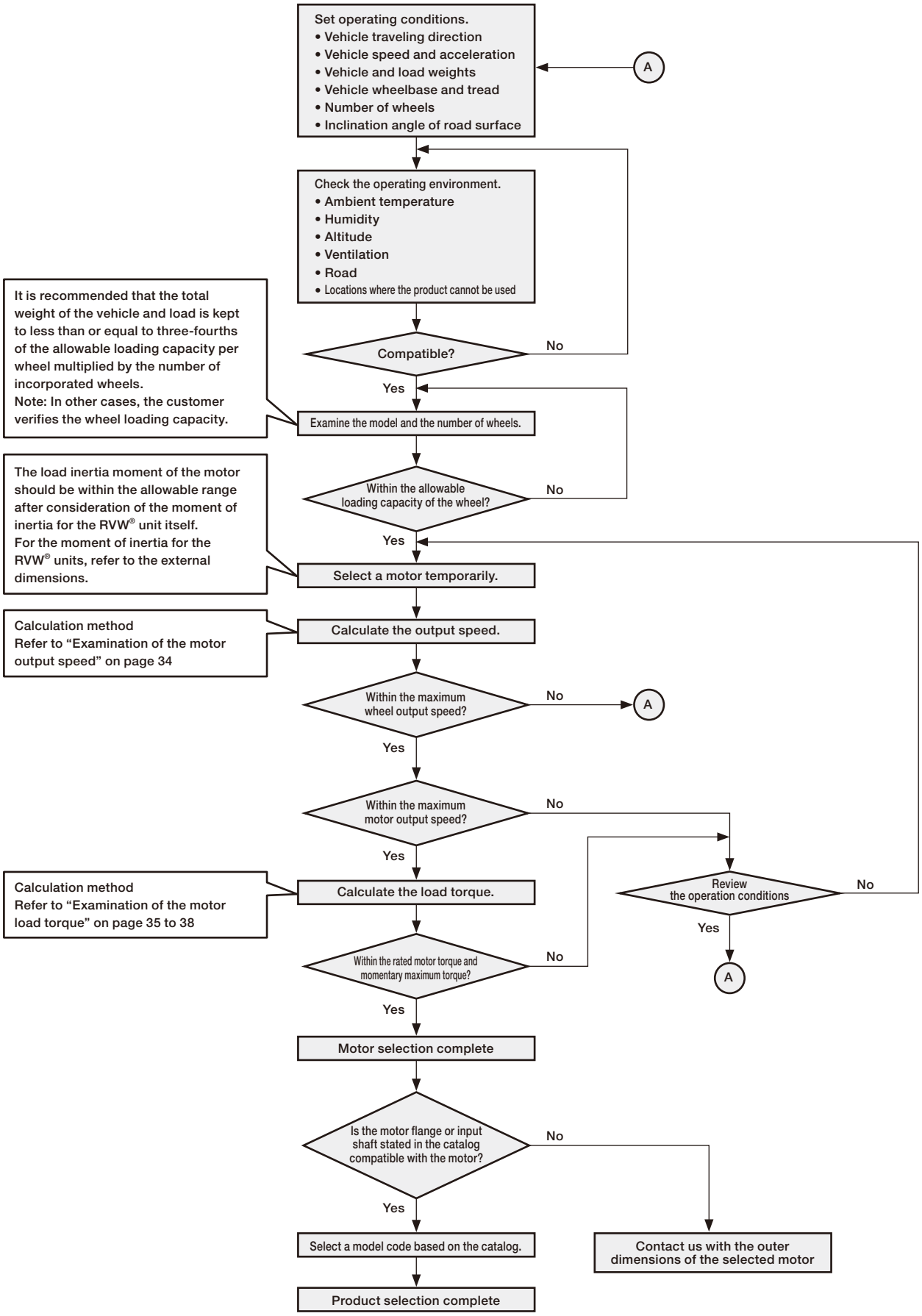

© 2020 Nabtesco Corporation. All rights reserved.

Product model and motor selection calculation formula

Examination of the motor output speed

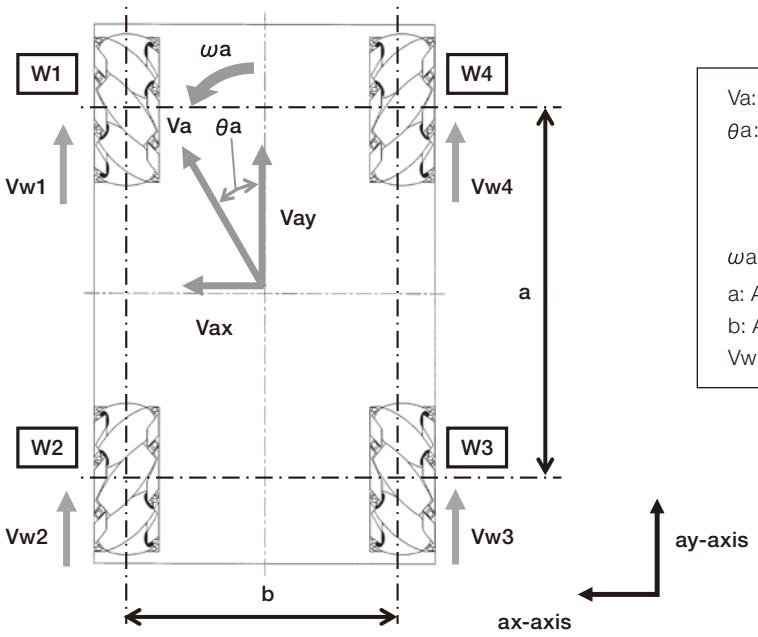

Va: AGV traveling speed (m/min)
θa: AGV traveling direction (degree)
Note: The direction of AGV forward travel is determined to be 0 (degrees) and the CCW direction of the wheel is positive.
ωa: AGV turning speed (rad/min)
a: AGV wheel base (m)
b: AGV tread (m)
Vw1 to 4: Speed of each wheel (m/min)

Figure: Speed vector of AGV and speed vector of each wheel (the figure shows the vehicle status when viewed from the top)
Note: For the rotation of each wheel and barrel, the rotation direction in which the AGV travels forward is positive.

(1) Calculate the ax-axis and ay-axis components of the AGV traveling speed

$Vax = Va \times \sin \theta a$

$Vay = Va \times \cos \theta a$

(2) Calculate the wheel speeds from the Vax, Vay, and ωa

$Vw1 = Vay - Vax - (a+b)/2 \times \omega a$

$Vw2 = Vay + Vax - (a+b)/2 \times \omega a$

$Vw3 = Vay - Vax + (a+b)/2 \times \omega a$

$Vw4 = Vay + Vax + (a+b)/2 \times \omega a$

(3) Calculate the wheel output speeds from the wheel speeds

Note: If the wheel output speed exceeds the maximum output speed of RVW® (refer to page 10), review the AGV traveling speed.

$Nw1 = Vw1 / (Dw \times \pi) / 1{,}000$

$Nw2 = Vw2 / (Dw \times \pi) / 1{,}000$

$Nw3 = Vw3 / (Dw \times \pi) / 1{,}000$

$Nw4 = Vw4 / (Dw \times \pi) / 1{,}000$

Nw1 to 4: Output speed of each wheel (rpm)
Dw: Wheel diameter (mm)
Refer to page 10

(4) Calculate the motor output speeds from the wheel output speeds

$Nm1 = Nw1 \times i$

$Nm2 = Nw2 \times i$

$Nm3 = Nw3 \times i$

$Nm4 = Nw4 \times i$

Nm1 to 4: Output speed of each motor (rpm)
i: Speed ratio
Refer to page 10

Note: Select a motor so that the motor output speeds calculated on this page does not exceed the maximum output speed of the motor.

© 2020 Nabtesco Corporation. All rights reserved.

Examination of the motor load torque (flat ground, at constant speed)

(1) Calculate the load torque applied to the wheel from the total weight

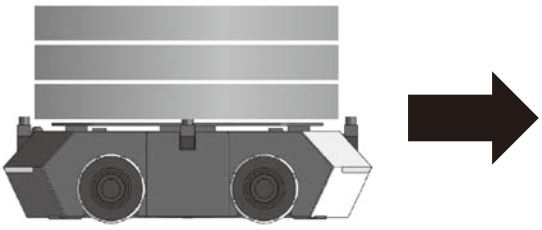

$$Tw = \frac{W}{4} \times 9.8 \times Crr \times C \times \frac{Dw}{2 \times 1{,}000}$$

(when the center of gravity of the vehicle and load match the center of the vehicle)

Tw: Wheel load torque (Nm)
W: Vehicle weight + load weight (kg)
Crr: Rolling resistance coefficient of the wheel
Refer to page 10
Dw: Wheel diameter (mm)
Refer to page 10
C: Correction coefficient
Note: Select the numeric value in accordance with the traveling direction

Correction coefficient C	
Travel forward/ backward	1
Rotation	1
Traverse	2
Diagonal movement	2.5

(2) Convert the wheel load torque into the motor load torque.

$$Tm = \left(\frac{Tw}{0.95} + T_{no} \right) / i$$

Tm: Motor load torque (Nm)
T_{no}: RVW® no-load running torque in accordance with the wheel output speed (Nm)
Refer to page 39
i: Speed ratio
Refer to page 10

Note: Select a motor so that the motor load torque value calculated on this page does not exceed the rated motor torque.

© 2020 Nabtesco Corporation. All rights reserved.

Examination of the motor load torque (flat ground, during acceleration/deceleration)

(1) Calculate the load torque applied to the wheel using the total weight and acceleration.

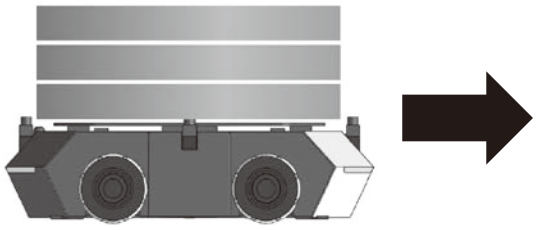

$$Tw = \frac{W}{4} \times (a + 9.8 \times Crr \times C) \times \frac{Dw}{2 \times 1{,}000}$$

(when the center of gravity of the vehicle and load match the center of the vehicle)

Tw: Wheel load torque (Nm)
W: Vehicle weight + load weight (kg)
a: Acceleration (m/s^2) (during acceleration: +, during deceleration: –)
Crr: Rolling resistance coefficient of the wheel
Refer to page 10
Dw: Wheel diameter (mm)
Refer to page 10
C: Correction coefficient
Note: Select the numeric value in accordance with the traveling direction

Correction coefficient C	
Travel forward/ backward	1
Rotation	1
Traverse	2
Diagonal movement	2.5

(2) Convert the wheel load torque into the motor load torque.

$$Tm = \left(\frac{Tw}{0.95} + T_{no} \right) / i$$

Tm: Motor load torque (Nm)
T_{no}: RVW® no-load running torque in accordance with the wheel output speed (Nm)
Refer to page 39
i: Speed ratio
Refer to page 10

Notes: 1. The wheel torque value calculated on this page should not exceed the allowable acceleration/deceleration torque (refer to page 10).
2. Select a motor so that the motor load torque value calculated on this page does not exceed the motor momentary maximum torque.

© 2020 Nabtesco Corporation. All rights reserved.

Examination of the motor load torque (slope, at constant speed)

(1) Calculate the load torque applied to the wheel using the total weight and inclination angle.

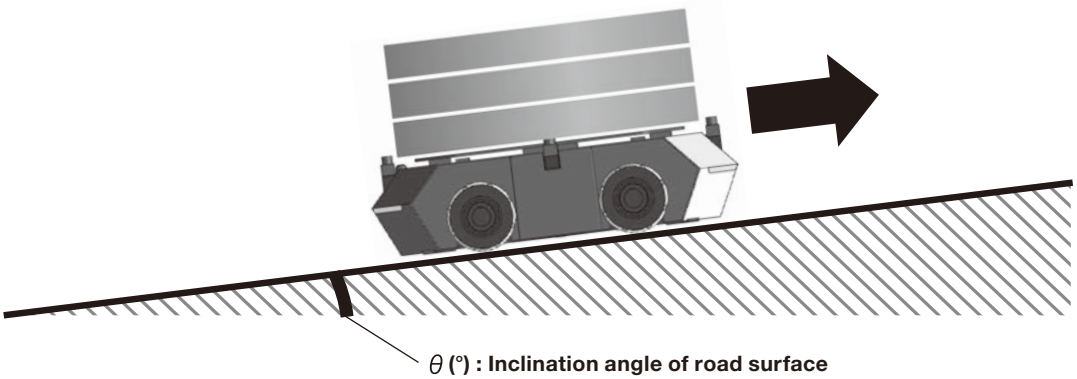

θ (°) : Inclination angle of road surface

$$Tw = \frac{W}{4} \times 9.8 \times (SIN\theta + Crr \times C \times COS\theta) \times \frac{Dw}{2 \times 1{,}000}$$

(when the center of gravity of the vehicle and load match the center of the vehicle)

Tw: Wheel load torque (Nm)
W: Vehicle weight + load weight (kg)
Crr: Rolling resistance coefficient of the wheel
Refer to page 10
Dw: Wheel diameter (mm)
Refer to page 10
C: Correction coefficient
Note: Select the numeric value in accordance with the traveling direction

Correction coefficient C	
Travel forward/ backward	1
Rotation	1
Traverse	2

Note: Do not perform the diagonal movement on a slope due to safety reasons.

(2) Convert the wheel load torque into the motor load torque.

$$Tm = \left(\frac{Tw}{0.95} + T_{no} \right) / i$$

Tm: Motor load torque (Nm)
T_{no}: RVW® no-load running torque in accordance with the wheel output speed (Nm)
Refer to page 39
i: Speed ratio
Refer to page 10

Note: Select a motor so that the motor load torque value calculated on this page does not exceed the rated motor torque. Also it is recommended to review the traveling conditions.

© 2020 Nabtesco Corporation. All rights reserved.

Examination of the motor load torque (slope, during acceleration/deceleration)

(1) Calculate the load torque applied to the wheel using the total weight and inclination angle.

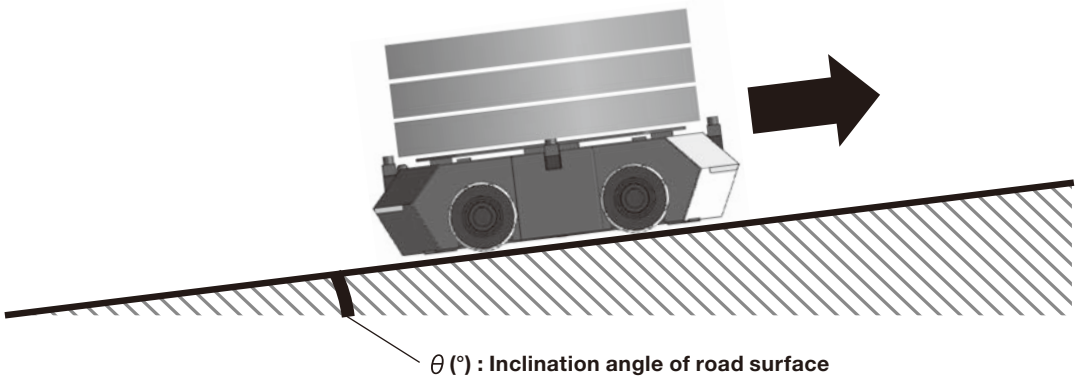

$$Tw = \frac{W}{4} \times \{ a \times 9.8 \times (SIN\theta + Crr \times C \times COS\theta) \} \times \frac{Dw}{2 \times 1{,}000}$$

(when the center of gravity of the vehicle and load match the center of the vehicle)

Tw: Wheel load torque (Nm)
W: Vehicle weight + load weight (kg)
a: Acceleration (m/s^2) (during acceleration: +, during deceleration: –)
Crr: Rolling resistance coefficient of the wheel
Refer to page 10
Dw: Wheel diameter (mm)
Refer to page 10
C: Correction coefficient
Note: Select the numeric value in accordance with the traveling direction

Correction coefficient C	
Travel forward/ backward	1
Rotation	1
Traverse	2

Note: Do not perform the diagonal movement on a slope due to safety reasons.

(2) Convert the wheel load torque into the motor load torque.

$$Tm = \left(\frac{Tw}{0.95} + T_{no} \right) / i$$

Tm: Motor load torque (Nm)
T_{no}: RVW® no-load running torque in accordance with the wheel output speed (Nm)
Refer to page 39
i: Speed ratio
Refer to page 10

Note: Select a motor so that the motor load torque value calculated on this page does not exceed the motor momentary maximum torque. Also it is recommended to review the traveling conditions.

© 2020 Nabtesco Corporation. All rights reserved.

No-load running torque

Note: The values in the following graphs are for the reduction gear alone, and indicate the average values after the break-in period.

[Measurement conditions]
Case temperature: 30°C

Reduction gear used in the RVW-7PG

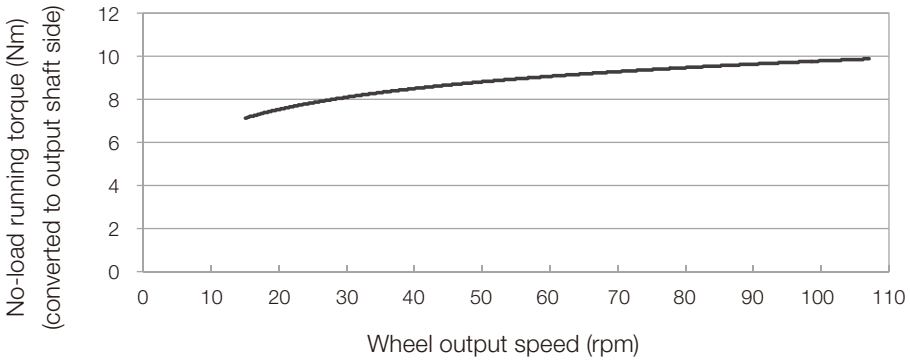

Reduction gear used in the RVW-10PG

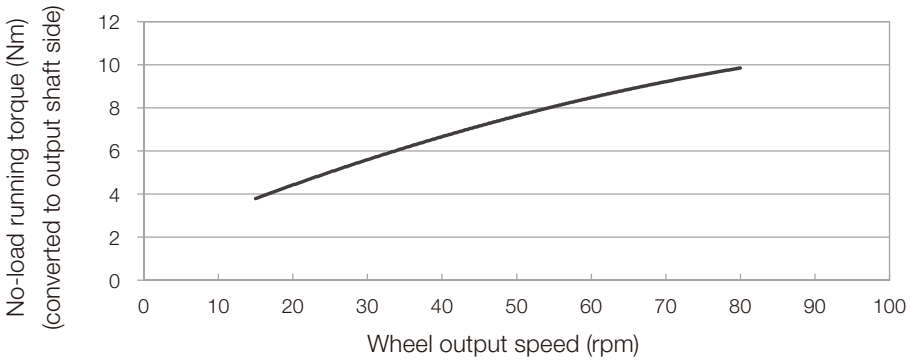

Reduction gear used in the RVW-15PG

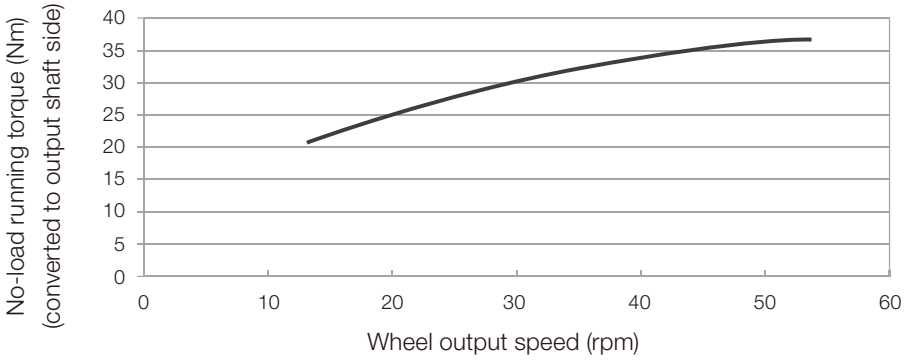

Reduction gear used in the RVW-20PG

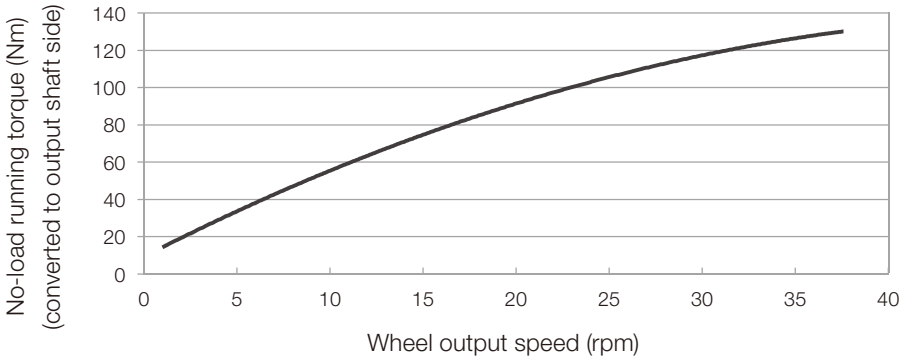

© 2020 Nabtesco Corporation. All rights reserved.

Installation of the gearhead and wheel

When installing the gear head and wheel, use hexagon socket head cap screws and tighten them at the tightening torque shown below in order to satisfy the allowable acceleration/deceleration torque, which is noted in the rating table. The use of the Belleville spring washer is recommended to prevent the bolt from loosening and protect the bolt seat surface from flaws.

• Hexagon socket head cap screw

<Bolt tightening torque and tightening force>

Hexagon socket head cap screw nominal size x pitch (mm)	Tightening torque (Nm)	Tightening force F (N)	Bolt specification
M5 ×0.8	9.01±0.49	9,310	Hexagon socket head cap screw JIS B 1176: 2006 Strength class JIS B 1051: 2000 12.9 Thread JIS B 0209: 2001 6g
M6 ×1.0	15.6±0.78	13,180	
M8 ×1.25	37.2±1.86	23,960	
M10 ×1.5	73.5±3.43	38,080	
M12 ×1.75	129±6.37	55,100	
M16 ×2.0	319±15.9	103,410	

Notes: 1. The tightening torque values listed are for steel or cast iron material.
2. If softer material, such as aluminum or stainless steel, is used, limit the tightening torque. Also take the transmission torque and allowable moment into due consideration.

<Calculation of allowable transmission torque of bolts>

$$T = F \times \mu \times \frac{D}{2 \times 1{,}000} \times n$$

T	Allowable transmission torque by tightening bolt (Nm)
F	Bolt tightening force (N)
D	Bolt mounting P.C.D. (mm)
μ	Friction factor μ=0.15: When lubricant remains on the mating face. μ=0.20: When lubricant is removed from the mating face.
n	Number of bolts (pcs.)

• Serrated lock washer for hexagon socket head cap screw

Name: Belleville spring washer (made by Heiwa Hatsujyo Industry Co., Ltd.)
Corporation symbol: CDW-H
CDW-L (Only for M5)
Material: S50C to S70C
Hardness: HRC40 to 48

(Unit: mm)

Nominal size	ID and OD of Belleville spring washer		t	H
	ϕd	ϕD		
5	5.25	8.5	0.6	0.85
6	6.4	10	1.0	1.25
8	8.4	13	1.2	1.55
10	10.6	16	1.5	1.9
12	12.6	18	1.8	2.2
16	16.9	24	2.3	2.8

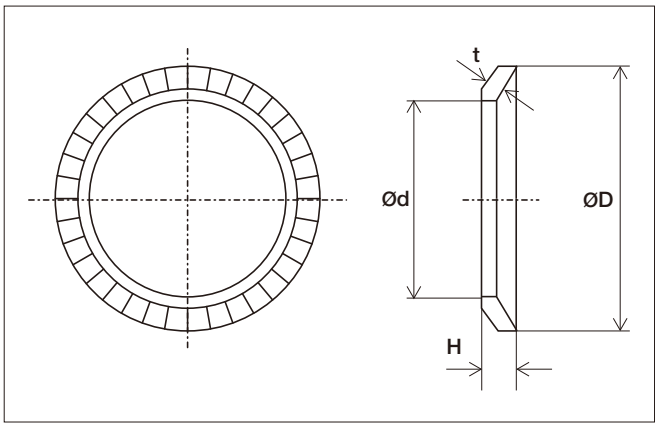

Note: When using any equivalent washer, select it with special care given to its outside diameter D.

© 2020 Nabtesco Corporation. All rights reserved.

Lubrication

The information on this page applies to the RVW-10PG, RVW-15PG, and RVW-20PG. The RVW-7PG is filled with lubricant when shipped from Nabtesco, and the customer does not need to prepare or replace the lubricant.

Lubricant

The RVW® unit is not filled with lubricant when shipped from Nabtesco. The customer should prepare the lubricant specified by Nabtesco beforehand.

In order to take advantage of the performance of this product, use the Nabtesco-specified lubricant.

Using other types of lubricant may cause deterioration of performance and premature damage.

Do not mix the Nabtesco-specified lubricant with other lubricants.

Mixing with other lubricants may cause deterioration of performance, generation of abnormal noise, and premature damage.

Brand specified by Nabtesco		Operating temperature range (ambient temperature)
ENEOS Corporation	BONNOC AX68	-10 to 40°C

Amount of lubricant

Be sure to fill the product with the required amount of the Nabtesco-specified lubricant.

(When using the pneumatic pressure for filling the lubricant, set the set pressure to 0.03 MPa or less.)

Model	RVW-10PG	RVW-15PG	RVW-20PG
Required amount	171 cc	585 cc	894 cc

- The appropriate amount of lubricant for the number of RVW® units is needed.
- Check the required amount of lubricant for products other than those included in this catalog with reference to the individual outer dimensions.

Lubricant replacement time

During proper operation of the reduction gear, the standard lubricant replacement time due to lubricant degradation is 20,000 hours.

When operation involves a reduction gear surface temperature above 40°C (the ▨ area in the following diagram), the state of the lubricant should be checked in advance and the lubricant replaced as early as necessary.

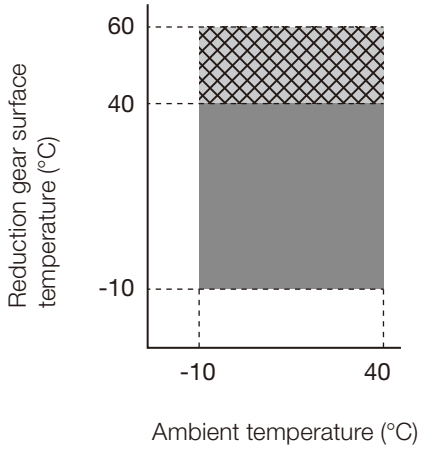

© 2020 Nabtesco Corporation. All rights reserved.

Engineering notes

Allowable loading capacity

- Do not use the RVW® such that its allowable loading capacity per wheel is exceeded.
- To prevent an excessive concentrated load to one wheel, take the vehicle center of gravity and load center of gravity into consideration.
- It is recommended that the total weight of the vehicle and load is kept to “less than three-fourths of the allowable loading capacity per wheel multiplied by the number of incorporated wheels” after taking variations in load distribution coming from road surface conditions into consideration.
- Take appropriate measures so that the load does not exceed the allowable loading capacity of the wheel due to an impact caused when loading the vehicle.

Road surface

- The road should have a flat concrete surface that is free from foreign objects (dust, sand, water, or oil), level differences, grooves, or significant concave or convex areas.
- When the vehicle goes over a level difference or groove unavoidably, it should travel forward or backward. Use the vehicle after taking appropriate measures into consideration beforehand.
  In addition, it is recommended to install an appropriate foreign object removal mechanism in the vehicle so that no foreign objects on the road surface become entangled.
- The strength of the road surface should be verified using the actual vehicle beforehand. Reinforce the road surface or restrict the load weight as necessary.

Vehicle behavior

- The wheels may slip due to road surface conditions (oil, water, or inclination) or sudden acceleration or deceleration of the vehicle.
  In addition, when there are wheels that idle due to a level difference, it may affect the vehicle behavior, for example, the vehicle does not travel in the specified direction. In particular, when the vehicle performs a diagonal movement on a slope, its behavior may become unstable due to road surface conditions. Avoid such movement due to safety concerns.
- Maintain a sufficient distance so that the vehicle does not hit a person or an object or take appropriate safety measures so that a person does not approach the vehicle even when wheels slip or idle.
- To make the vehicle behavior stable, it is recommended to install a suspension mechanism so that all wheels are always in contact with a road surface.
- Take appropriate safety measures to prevent load drop or collapse when the vehicle behavior is disturbed.

Stopping on slope

- Avoid stopping on a slope.
  If a vehicle must be stopped on a slope unavoidably, add a function to maintain the position such as an external brake.

Failure during traveling

- If a power failure such as a voltage drop occurs while the vehicle is traveling, the vehicle may not stop completely due to inertial force.
  Therefore, use a motor with a brake to stop the vehicle using the brake immediately if any failure occurs.

Entanglement in wheel

- To prevent entanglement in a rotating wheel while the vehicle is traveling, install a protective cover (wheel cover) on the vehicle.

Installation of this product

- Install this product in the vehicle so that the wheel is perpendicular to the road surface as much as possible. If the wheel/road contact status is poor, the vehicle behavior may become unstable or the wheel may be damaged.

© 2020 Nabtesco Corporation. All rights reserved.

Appendix

Proposal for an AGV/AMR remote-controlled wagon

Note: The following information applies only to customers in Japan.

Since the launch of the RVW® series, we have received many requests from our customers asking us to create a proposal for a finished vehicle incorporating the RVW® unit.

In response to these requests, we are now prepared to sell remote-controlled wagons (*1) and can introduce our customers to a manufacturer of the AGV/AMR (*2).

*1: Nabtesco will provide finished vehicles that can only be operated manually by remote control as a contract sale.
*2: Nabtesco will introduce you an AGV/AMR manufacturer.

For vehicle proposals, please contact us at any time using the links below.

Contact information
https://precision.nabtesco.com/en/inquiry/
E-MAIL : P_Information@nabtesco.com

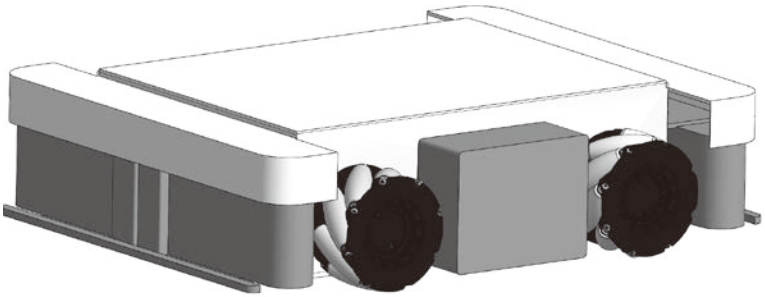

Appendix

Links to websites of related videos

Video
Application example of Mecanum AGV
(https://youtu.be/eRYdVo0mKBI)

Video
Features of Mecanum AGV
(https://youtu.be/EgI6STHtxv8)

© 2020 Nabtesco Corporation. All rights reserved.

Troubleshooting checksheet

Check the following items in the case of trouble like abnormal noise, vibration, or malfunctions.
When it is not possible to resolve an abnormality even after verifying the corresponding checkpoint, obtain a "Gearbox investigation request form" from our Website. Fill in the necessary information, and contact us via the agent where you bought the device.

[URL]: **https://precision.nabtesco.com/en/download/**

The trouble started immediately after installation of this product

Check column	Item
	Make sure the product's drive section (the motor side or the reduction gear output surface side) is not interfering with another component.
	Make sure a load greater than the expected level (allowable loading capacity or maximum speed) is not applied.
	Make sure the required number of bolts is tightened uniformly with the specified tightening torque.
	Make sure the reduction gear, motor, or your company's components are not installed at a slant.
	Make sure the specified amount of Nabtesco-specified lubricant has been added.
	Make sure there are no problems with the motor's parameter settings.
	Make sure there are no components resonating in unity.
	Make sure the input shaft is appropriately installed on the motor.
	Make sure there is no damage to the surface of the input shaft teeth.
	Make sure the barrel orientation (torsion direction) is correct.
	Make sure four wheels are on the ground.

The trouble started during vehicle operation

Check column	Item
	Make sure this product has not been in operation longer than the calculated service life.
	Make sure the surface temperature of this product is not higher than normal during operation.
	Make sure the operation conditions have not been changed.
	Make sure there are no loose or missing bolts.
	Make sure a load greater than the expected level (allowable loading capacity or maximum speed) is not applied.
	Make sure the drive section of this product is not interfering with another component.
	Make sure an oil leak is not causing a drop in the amount of lubricant.
	Make sure there are no external contaminants in the gear, such as moisture or metal powder.
	Make sure no lubricant other than that specified is being used.
	Make sure the barrel is not worn out, cracked, or damaged.
	Make sure the wheel is not contaminated.
	Make sure no abnormal noise or rattle occurs in the bearing.
	Make sure no abnormal noise is generated during rotation of the wheel.
	Make sure no oil, water, dust, or sand is adhered to a road surface.

© 2020 Nabtesco Corporation. All rights reserved.

Warranty

1. In the case where Nabtesco confirms that a defect of the Product was caused due to Nabtesco's design or manufacture within the Warranty Period of the Product, Nabtesco shall repair or replace such defective Product at its cost. The Warranty Period shall be from the delivery of the Product by Nabtesco or its distributor to you (“Customer”) until the end of one (1) year thereafter, or the end of two thousand (2,000) hours from the initial operation of Customer's equipment incorporating the Product at end user's production line, whichever comes earlier.

   Notwithstanding the foregoing, a defect of the wheel is not covered by the warranty unless Nabtesco confirms that this defect was caused due to Nabtesco’s design or manufacture, since the wheel is a consumable part.

2. Unless otherwise expressly agreed between the parties in writing, the warranty obligations for the Product shall be limited to the repair or replacement set forth herein. OTHER THAN AS PROVIDED HEREIN, THERE ARE NO WARRATIES ON THE PRODUCT, EXPRESS OR IMPLIED, INCLUDING WITHOUT LIMITATION ANY IMPLIED WARRANTY OF MERCHANTABILITY OR FITNESS FOR A PARTICULAR PURPOSE.

3. The warranty obligation under the Section 1 above shall not apply if:

   a) the defect was caused due to the use of the Product deviated from the Specifications or the working conditions provided by Nabtesco;

   b) the defect was caused due to exposure to foreign substances or contamination (dirt, sand etc.)

   c) lubricant or spare part other than the ones recommended by Nabtesco was used in the Product;

   d) the Product was used in an unusual environment (such as high temperature, high humidity, a lot of dust, corrosive/volatile/inflammable gas, pressurized/depressurized air, under water/liquid or others except for those expressly stated in the Specifications);

   e) the Product was disassembled, re-assembled, repaired or modified by anyone other than Nabtesco;

   f) the defect was caused due to the equipment into which the Product was installed;

   g) the defect was caused due to an accident such as fire, earthquake, lightning, flood or others; or

   h) the defect was due to any cause other than the design or manufacturing of the Product.

4. The warranty period for the repaired/replaced Product/part under the Section 1 above shall be the rest of the initial Warranty Period of the defective Product subjected to such repair/replace.

© 2020 Nabtesco Corporation. All rights reserved.

Rev. 004

Nabtesco®

Nabtesco Corporation

Europe and Africa

Nabtesco Precision Europe GmbH
Tiefenbroicher Weg 15, 40472 Düsseldorf, Germany
TEL: +49-211-173790 FAX: +49-211-364677
E-MAIL: info@nabtesco.de www.nabtesco.de

North and South America

Nabtesco Motion Control Inc.
23976 Freeway Park Drive, Farmington Hills, MI 48335, USA
TEL: +1-248-553-3020 FAX: +1-248-553-3070
E-MAIL: engineer@nabtescomotioncontrol.com www.nabtescomotioncontrol.com

China

Shanghai Nabtesco Motion-equipment Co., Ltd.
Room 1706, No. 388 Fu Shan Road, Pudong New Area, Shanghai 200122, China
TEL: +86-21-3363-2200 FAX: +86-21-3363-2655
E-MAIL: info@nabtesco-motion.cn www.nabtesco-motion.cn

India

Nabtesco India Private Limited
Site No.485/9, 14th Cross, Peenya Industrial Area, 4th Phase, Bangalore -560 058 Karnataka India
TEL: +91-80-4123-4901 FAX: +91-80-4123-4903
E-MAIL: Nti_pn@nabtesco.co.in www.nabtesco.co.in

Asia and others

Nabtesco Corporation
Nagoya Sales Office
9th Fl, Nagoya 2nd Saitama Bldg., 2-28 Meieki 4-chome, Nakamura-ku, Nagoya 450-0002, Japan
TEL:+81-52-582-2981 FAX:+81-52-582-2987

Customer Support Center
594 Icchoda, Katada-cho, Tsu, Mie 514-8533, Japan
TEL: +81-59-237-4672 FAX: +81-59-237-4697

E-MAIL: P_Information@nabtesco.com https://precision.nabtesco.com/

- Nabtesco, RV, and RVW are registered trademarks or trademarks of Nabtesco Corporation.
- BONNOC is a registered trademark of ENEOS Corporation.
- Specifications are subject to change without notice.
- The PDF data of this catalog can be downloaded from the following website.
  https://precision.nabtesco.com/
  If any addition or modification is made to the published information, the PDF data may be updated before the printed catalog.
  Due to this, please note that some contents of the PDF data may be changed or revised from those in this catalog.
- Unauthorized reprinting, reproduction, copying, or translation of this catalog in whole or in part is strictly prohibited.
- © 2020 Nabtesco Corporation. All rights reserved.

MS JAB CM009

ISO 14001 JQA-EM7212

ISO 9001 JQA-1190

ISO 45001 JQA-OH0278

レジリエンス認証
事業継続および社会貢献
認証・登録番号E0000053

CAT.210125 (Issued on July 31, 2023)